CHAPTER 1 GENERAL INFORMATION

1.1 Introduction

The Phyaction 787 is an advanced electro-therapeutic appliance. It is able to offer every form of electro-therapy from low frequency to medium frequency currents passing through one or two output channels, with or without making use of the build-in vacuum unit.

The text in italic with a footnote refer to the numbers on the fold out page at the last page of this service manual.

1.2 Safety aspects

Electrical safety
The appliance may only be used in an area which conforms to all the legal and statutory requirements.

Fire and Explosion hazards
The appliance should not be used in the proximity of inflammable gases or vapours. Make sure the appliance is turned off when disinfecting the work area as some disinfectants evaporate and form an explosive mixture.

Operational safety
- Simultaneous use of this appliance with a high frequency surgical appliance on a patient could cause burns to occur underneath the electrodes. A short-wave or micro-wave appliance could influence the output current of the appliance if used in the proximity.
- The appliance should be used solely for electro-therapy. It should only be used in dry workrooms and is not suitable for wet areas.
- The appliance should not be disinfected or sterilized.
- The appliance is intended for continuous use.
- The appliance possesses a built-in safety system which works independently from the processor, so that if it encounters a mistake it automatically switches off the output current within a few milliseconds, thereby making it impossible to continue the therapy and thus guaranteeing the patient's safety. Every time the appliance is switched on (by means of the main on/off switch) the processor runs through the whole safety system to ensure it is functioning correctly.

Use of the appliance
The appliance should only be used by qualified operators according to the instructions stated herein.

This equipment is intended to be used exclusively for the administration of electrotherapy.

1.3 Installation

Incoming inspection
Upon receiving the appliance, check to see that no damage has occurred during transport and if all the parts are intact and the whole is complete (see chapter 1 TECHNICAL SPECIFICATIONS). Should you perceive anything wrong, please notify your dealer immediately.

Mains voltage

The appliance can be run off the mains at 110, 120, 220, or 240 Volts AC, 50/60 Hz. At the back of the appliance you can read for which of the above your appliance has been set. You cannot change the setting yourself. Please ensure that it is correct before plugging into the mains. The mains input is at the back of the appliance.

Function testing
The electrical performance and safety of the appliance is checked throughout its production and before leaving the factory. Every time the appliance is turned on with the main switch the processor carries out an elaborate control to ensure all its functions are working correctly. During this control, check for your part that the display and all the lights are also in order. For a complete functional check refer to the Function test/verification chapter.

Choice of language
The appliance offers a choice of languages in which you can give your instructions. The setting of your choice is achieved by holding down the yellow key for several seconds until the menu *Standard settings* appears. After you have chosen one of the languages, the appliance will communicate with you in the language of your choice.

Setting up and transportation
When you are about to use the appliance for the first time you are requested to read chapters SAFETY ASPECTS and INSTALLATION beforehand. Place the appliance horizontally on a stable base. Make sure the vents are not obstructed in any way so that effective ventilation is impeded. Do not place any objects on top of the appliance and ensure that no liquids get into it.
Should you transport the appliance on its side, for instance in a case, we recommend that you empty the water reservoir of the vacuum unit first.

1.4 Description of the Controls

Display screen
The *display*[1] is composed of 15360 separate pixels, each of which is separately controlled by a processor in order to form text and figures. The screen will display all the data you require while you are treating a patient.

- the name of the program chosen is displayed at the left top with the current type in stylized form at the left top.
- the middle section offers you data concerning parameters.
- the section on the right hand side gives you data on output current, polarity, duration of treatment and the type of electrode.
- the bottom section of the display denotes the functions of the blue control key.s

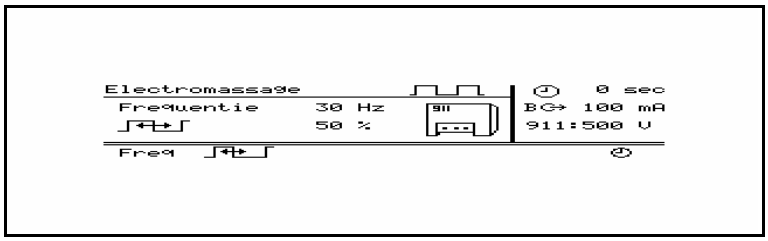

Layout of the display

Signal lights
In the center of the panel you will find three colored lights, whereas next to each output circuit there is a yellow light.

- The *green LED*[2] shows the appliance has been connected to the mains and that the main switch is on.

- The *yellow monitor LED*[3] offers you data concerning the stimulus. It will display the stimulus time for faradic surge current, interrupted galvanic current and medium frequency surge current. For currents with frequency modulation it will display the period when the frequency is low, i.e. at the most sensitive for the patient.
- The *red LED*[4] only turns on if the safety system has encountered a fault. A message will appear on the display. See chapter Error messages.
- The yellow LED[5] next to the outputs will light up as soon as a current greater than 5 mA_{eff} is passing through the relevant circuit.

Knobs

On the right hand side of the front panel there are four knobs with the following functions, from bottom to top:

- The *dosage regulator*[6], a conveniently large knob for accurate adjustment. When turned fully to the left a click is felt and the regulator will be on zero.
- The *current mode switch*[7] with which you can choose between rectified or alternating current.
- The *contrast knob*[8] which regulates the brightness of the display.
- The *vacuum regulator*[9] (only on model 787) with which you activate the vacuum pump unit and regulate the suction force. If a pulsating vacuum is desired, this can be obtained through the right yellow key. The pump can be turned on at any moment, but only when the dosage regulator is on zero will the outputs be switched over from the banana to the tube sockets. On the right hand side of the display you will find data concerning electrode application.

Push buttons

- The *blue keys*[10] have a function which varies per program and per menu. The display will show clearly whether the keys have got a function and if so, which one.
- The *black keys Up and Down*[11] are used to increase or decrease the value of a pre-selected parameter.
- The *left yellow key*[12] is used to return to the MAIN MENU. When a different language is required this key should be held down for a few seconds and a special STANDARD SETTING menu will appear.
- The *right yellow key*[13] shows you clearly and rapidly what other possibilities a program offers.
- The *green key*[14] enables you to activate the special memory function any time this is required. Here 250 different parameter sets can either be stored, recalled or changed.

Output sockets at the front

- Model 782 has *one or two output circuits*[15]. Each consists of two safety banana sockets onto which the electrodes are plugged. The cables of the electrodes are equipped with safety plugs.
- The 787 model has besides the safety banana sockets, two sets of *tube sockets*[16] for the vacuum electrodes.
- The output circuits for the 782 and 787 models are called A and B. Seen from the front, *A is on the left and B is on the right*.

Controls at the back of the appliance

- The mains entry port and the *main switch*[17].
- The *fuse holder*[18] is situated between the mains entry port and the main switch. The required type of fuse is listed on the back of the appliance.

- The *drainage tube*[19] from the water reservoir. The vacuum pump will suck the moisture out of the sponge heads which will be collected in the reservoir inside the appliance. A message on the display warns you when the reservoir is full.
- The *air outlet*[20] of the vacuum pump. Do not cover up this opening in any way. The air blown out in this way will be dry as the moisture sucked up at the same time will have been extracted and collected in the reservoir.
- The *serial in- and output socket*[21]. This has been added for future extensions.

- The socket to connect the appliance to the *potential equalization busbar*[22].

1.5 Explanation of Symbols

General

indication of treatment time

indication of polarity

output via channel 'A' ON/OFF

output via the plate electrodes

output via the vacuum electrodes

Rectified current forms

rectified current forms

galvanic continuous

interrupted rectangular

interrupted triangular

faradic rectangular

faradic triangular

ultra Reiz

MF modulation

DF modulation

CP modulation

CP-iso modulation

LP modulation

Options for rectified current forms

option key for selection of faradic triangular

option key for selection of faradic rectangula

alternating polarity ON

alternating polarity OFF

alternating channels ON

alternating channels OFF

sound signal ON/OFF

balance key

Alternating current forms

alternating current forms

distribution of stimulation in isoplanar vector field

direction of stimulation in dipole vector field

direction of stimulation in classic interference current

two pole MF current

MF surge current

biphasic types of current

biphasic current, continuous

biphasic current, random

biphasic current, burst

biphasic current, surge

Options for alternating current forms

biphasic asymmetrical pulse

biphasic sequential pulse

biphasic symmetrical pulse

balance key

key for adjusting direction of dipole vector

alternating channels ON

alternating channels OFF

sound signal ON/OFF

Parameter adjustments

pulse time

pulse interval

train time

train interval

contour

pulse time biphasic current

frequency of biphasic current

stimulation time with biphasic and MF surge

stimulation interval with biphasic and MF surge

timming clock

interchancing poles

Treatment memory

programmable memory

patient card 75 selected

CURRENT FORM memory menu

COCKTAIL memory menu

I-T CURVES memory menu

saving a current form

saving a cocktail step

saving an I/t curve

erasing the contents of the memory

I/t curve

reviewing the I/t curve

making a corrective measurement

moving the cursor left and right

Vacuum unit

continuous vacuum

intermittent vacuum

Symbols on the front of the appliance

Memory function

Return to main menu

Options for this program

Raising the selected parameter

Lowering the selected parameter

Indicator light for stand-by equalizer

Indication light for stimulus

Indication for detected error

Output

"OFF" for a part of equipment

Alternating current

Rectified current

Display screen contrast

Plate electrodes

Vacuum electrode

Symbols on the back

off

on

fuse

water reservoir

serial in- and output

potential mains equalizer

type BF

do not open

read manual

100 YYYY-MM Date of manufacturing, year-month

LOT XXXXX Serial number

Special symbols for CSA

101 Caution, to reduce the risk of electric shock, do not remove cover.

102 Warning. Risk of fire. Replace fuse as marked

T630H250V Fuse T 630 mA, 250 V

1.6 Technical specifications

Rectified currents

Programs:
- Continuous galvanic current
- Interrupted galvanic current, rectangular or triangular pulse
- Ultra Reiz current
- Faradic current, rectangular and triangular pulses

Parameters:
- Pulse time 0.1/1000 ms
- Pause time 2/10000 ms
- Train time 1/100 sec
- Rest 1/100 sec
- Surge 0/100%
- Maximum output current 80 mA_{peak} at 500 Ω
- Channel choice A or B, or both

Diadynamic currents

Programs:
- MF
- DF
- CP
- CP-ISO
- LP

Parameters:
- MF frequency 5/200 Hz
- DF frequency 2 x MF frequency
- MF time 1/100 sec
- DF time 1/100 sec
- Contour 1/100%
- Maximum output current 80 mA_{peak} at 500 Ω
- Channel choice A or B, or both

Four-pole interference currents

Programs
- Isoplanar vector field

- Dipole vector field
- Classic interference

Parameters:
- Carrier frequency 4000 Hz
- AMF 1-200 Hz
- Spectrum 0-200 Hz
- Time in which the spectrum is swept 1-100 sec
- Contour 1-100%
- Dipole vector field rotatable through 360°
- Rotation speed of the dipole vector 0-10 sec
- Maximum output current per channel 140 mA_{peak} at 500 Ω

Two-pole medium frequency current
- Carrier frequency 4000 Hz
- AMF 1-200 Hz
- Spectrum 0-200 Hz
- Time in which the spectrum is swept 1-100 sec
- Contour 1-100%
- Maximum output current 140 mA_{peak} at 500 Ω
- Channels choice A or B, or both

Medium frequency surge current
- Carrier frequency 4000 Hz
- AMF 1-200 Hz
- Stimulus time 1-100 sec
- Rest 1-100 sec
- Surge 0-100%
- Maximum output current 140 mA_{peak} at 500 Ω
- Channels choice A or B, or both

Biphasic current, continuous

Parameters:
- Pulse time 10-100 µsec
- Pulse frequency 1-1000 Hz
- Spectrum 1-200 Hz
- Time 1-100 sec
- Contour 1-100%
- Maximum output current 140 mA_{peak} at 500 Ω
- Channel choice A or B, or both

Pulse form: asymmetrical, symmetrical or sequential pulse

Biphasic current, random

Parameters:
- Pulse time 10-100 µsec
- Pulse frequency 1-1000 Hz
- Maximum output current 140 mA_{peak} at 500 Ω
- Channel A or B, or both

Pulse form: asymmetrical, symmetrical or sequential pulse

Biphasic current, burst

Parameters:
- Pulse time 10-100 µsec
- Pulse frequency 80-1000 Hz
- Burst frequency 1-10 Hz

- Maximum output current 140 mA_{peak} at 500 Ω
- Channel choice A or B, or both

Pulse form: asymmetrical, symmetrical or sequential pulse

Biphasic surge current

Parameters:
- Pulse time 10-100 µsec
- Pulse frequency 1-1000 Hz
- Train duration 1-100 sec
- Train interval 1-100 sec
- Contour 1-100%
- Maximum output current 140 mA_{peak} at 500 Ω
- Channel choice A or B, or both

Pulse form: asymmetrical, symmetrical or sequential pulse

Vacuum unit
- Working pressure maximum 0.3 bar (continuous) or 0.5 bar (pulsed)
- Continuous or pulsating vacuum with adjustable rhythm
- Signal for a full water reservoir
- Outputs are automatically switched from banana to vacuum sockets whenever the vacuum pump is activated.

Memory and I/t curve
- Fully programmable treatment memory with space for up to 250 treatment procedures and with battery back-up
- 69 standard programs for straightforward application with each indication
- Facility to formulate cocktails and to store them in the memory
- Automatic recording of the I/t curve
- I/t curve depicted graphically on the display
- Facility to store the I/t curve in the memory
- Automatic determination of the Accommodation Quotient (AQ)
- Assorted languages of instruction can be selected including: Dutch, English, German, French, Italian and Spanish
- Parameter pre-settings can be amended as you judge to be appropriate

General
- Treatment time digitally adjustable
- Beep can be turned on
- Choice of automatic or manual stimulus with a pulsator
- Automatic interchange of poles with gradual dose transition
- Alternating polarity for the treatment of patients with implants
- All current forms can be applied through two channels, also low-frequency and biphasic current
- Alternating channels for sequential stimulation
- Programmable memory for 250 treatments and battery back-up
- 50 standard programs for applications by indication.
- Choice of four languages on the display
- Extensive system for pre-setting the parameters
- Automatic polarity reversal with gradual change
- Serial in- and output socket at the back for future extensions
- Built-in electrode- and cable tester
- Solid metal casing (Faraday's cage)
- Ergonomical casing
- Very straightforward to operate due to the use of easily comprehensible symbols and the availability of several different languages of instruction
- Dimensions 41x28x13 cm

- Weight 9 kg
- Insulation class I type BF
- Voltage 110, 120, 220 or 240 Volt AC, frequency 50/60 Hz
- Input current 600 mA_{rms} max @ 110 Volt AC mains operation
- Input current 300 mA_{rms} max @ 220 Volt AC mains operation

Replaceable parts
- Fuses at the main entry 630 mA Slow Blow (110 Volt AC mains setting)
- Fuses at the main entry 325 mA Slow Blow (220 Volt AC mains setting)

Standard equipment
The appliance is supplied with standard equipment as listed below. The Uniphy order number is given with each piece of equipment.

Model PHYACTION 782

instructions for use	930080
mains lead, 2.5 m, with IEC powercord plug	131710
4 patient cables, with rubber electrodes 6 x 8.5 cm	131112
6 sponges 6 x 8.5 cm	131102
4 m elastic straps	131589

Model PHYACTION 787 and 785 as model 782 but with extra:

4 vacuum tubes	131555
4 vacuum electrodes 6.5 cm	131560
6 sponges 6.5 cm	131570

For further accessories supplied with this appliance you can consult our catalogue.

CHAPTER 2 THEORY OF OPERATION

The unit is microprocessor controlled with exception of the safety monitoring circuit. The core consists of a 80C85 Microprocessor with the following peripheral circuits:

- 8 kbyte, battery backed up RAM
- 128 kbit EPROM for waveform tables
- 1 Mbit EPROM for the software
- 2 programmable I/O expanders for digital interfacing
- 8 channel ADC for feedback of analog parameters to the microprocessor
- 2 x 2 channel DAC for waveform synthesis, wave shape
- dual DAC for waveform synthesis, amplitude control

The user interface consists of a graphic LCD display, with its own controller and memory, and a key panel. The display is driven by the microprocessor directly via the microprocessor bus. (data, address and control). The key panel is interfaced through one of the I/O expanders. The user can, by means of the key panel, select the output waveforms and set or change all the relevant parameters through a menu structure. AC/DC selection is not done via the key panel but by means of a dedicated rotary switch. For detailed operating instructions, refer to the 780 series user manual.

Once the current type is selected the microprocessor drives the synthesizer to produce the requested waveform. The amplitude is proportional to the dose control setting. All waveforms are digitally synthesized using the waveform tables stored in EPROM. The digital information is converted to analog with a DAC and fed via two chopper circuits to the voltage to current convertors, two for each output channel.

The voltage to current convertors use transformers in the output thus galvanically isolating the patient circuit from the rest of the electronics. A signal, proportional to the output current, is fed to the safety control circuit. If the output current exceeds a maximum value or is 150% above the value set with the dose control, the error line will be activated. The supply voltage to the dose control is also monitored. The activated error line will cause the safety relay to drop off , isolating the patient circuit from the output. The safety relay will be latched out permanently even if the error condition ceases to exist. At power up the microprocessor has access to the safety circuit for 3 seconds to be able to test the safety relay. After the initial 3 seconds the microprocessor can only switch the safety relay off. The only way to activate the safety relay after a fault is to switch off the unit, clear the fault and switch on the unit.

A lot of thought has gone into the safety of the unit. The safety circuit operates completely independent of the microprocessor. Processor or program failures occurring during the treatment therefore cannot influence the proper function of the safety circuits. At power up of the unit a selftest is executed. The processor tests itself, memory (RAM and EPROM), the timers, the ADC's, the display and supply voltages. The next thing tested is the safety relay and the safety circuit. If any errors are encountered in the selftest, the safety relay is switched off, the fan and the red error light are switched on. If possible an error message is displayed.
An complete description of the selftest is discussed in a separate chapter.

The output current from the voltage to current convertors is fed via the yellow output lights, directly to the output or in case DC is selected via the rectifiers and filter to the output. AC/DC selection is done by a manual switch, monitored by the processor. The polarity in case of DC is changed by means of the polarity relay controlled by the processor.

With the vacuum unit a vacuum can be set in order to use vacuum electrodes. The circuit is switched on with the front panel vacuum control, it automatically switches the output from the banana safety jacks to the tube sockets by means of the vacuum relay, also processor controlled. The vacuum can be set between 30 and 300 mBar. By means of an extra menu, activated when the vacuum is switched on, the vacuum can be pulsed at selectable time intervals. The vacuum will increase from the set value to approximately 1.6 times the value and fall back to the set value. The maximum vacuum for continues vacuum mode is 300 Mbar the maximum in pulse mode will go to 500 mBar. The level of the vacuum is controlled by means of the vacuum pump and an electromagnetic valve. In case the vacuum level is to low the pump speed is increased and in case of to much vacuum, air is let into the system via the valve.

The mains transformer is of a special type. The isolation breakdown between primary and secondary is in excess of 4 kV. The transformer has taps so it can be wired for 110, 120, 220, and 240 Volt mains. The secondary has a 9 Volt and a 25 Volt winding the first is used for the +5 Volt logic supply and the latter for the +29 Volt unregulated and the +24, +15 and -15 regulated supply voltages.

The +5, +15 and -15 Volt supplies have crowbar circuits, shorting out the supplies in case of excess voltage. If the circuit is activated the voltage drops to 0.7 Volt thus protecting the electronics against excessive supply voltages.

The unit also contains a serial communication port. It is intended for use with future extensions of the 780 line. The port is galvanically isolated from the rest of the electronics by means of optocoupler circuits. In older units with 64 kbyte EPROMS the port cannot be used for lack of memory space available for the communication software.

CHAPTER 3 PERFORMANCE CHECK

1.1 Function test/verification

Required equipment:

1 Variac
1 Scope PM 3050, or equivalent, adjustment 2 Volt/div 2 ms/div Channel A & B
1 Resistance-box 500 Ohm
1 Vacuum meter

Refer to the foldout page (last page in this service manual) for location of controls on front and rear of the appliance.

1. Initial settings:
   on/off switch[17] on off, *dosage regulator*[6] on 0
   contrast knob[8] in the middle
   vacuum regulator[9] on 1
   current mode switch[7] on ac 2.

2. Adjust the mains voltage (mentioned on the appliance sticker) by means of the variac. Then, plug the mains cable into the *mains entry port*[18].

3. Switch on the appliance with the *mains switch*[17]. Check now if:
   a. the *green LED*[2] burns,
   b. the *yellow monitor LED*[4] burns,
   c. the *red LED*[4] burns,
   d. the display reports 787,785 or 782 with the right software version.

   PHYACTION 78x V x.xx
   made by UNIPHY-NL
   SYSTEMS CHECK

4. Push buttons test: push both on the left and on the right of each *button*[10..14] and check if they are all working.

5. Check, with the *contrast knob*[8] if the contrast of the display is adjustable. Then, put the *current mode switch*[7] on dc 3 . Connect the output via the resistance-box to the scope.

6. Select program 5 (Ultra Reiz). Then, push blue *button B X*[10] (see display). Turn the *dosage regulator*[6] on maximum output (80 mA) and check the type of current on the scope. The pulse time has to be 2 ms and the pause time 5 ms.

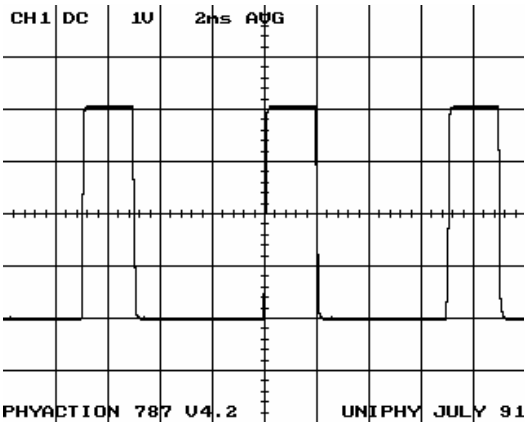

7. Push on the *polarity button*[10] ⊕→⊖5 and check on the scope if the polarity of the output changes. Also check if the two right *output LED's*[5] burn.

8. Turn the *dosage regulator*[6] back to 0 and turn on the *vacuum regulator*[9] a little. Turn the *dosage regulator*[6] on and check if the vacuum output LED's (left 2 *output LED's*[5]) light up.

9. Turn the *dosage regulator*[6] back to 0 and turn the *vacuum regulator*[9] back to 6. Switch the *current mode switch*[7] to ac 7 and select the first program (isoplanar vector).

10 Turn the *dosage regulator*[6] slowly to maximum output (140 mA) and check on the scope (2 Volt/div ; 2 msec/div):
- if the amplitude is adjustable with the *dosage regulator*[6]
- if the wave shape is conform the picture below

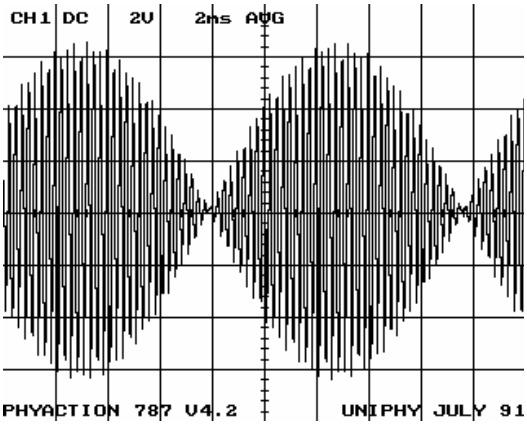

11 Put the scope on "X deflection." (X/Y) and check if the phase movement is 90° (on the scope you should see a circle now).

12 Turn the *dosage regulator*[6] back to 0. Return to the main menu via *button*[12] and select program 2 (dipole vector). Return to the submenu via *button*[13] and select AUTO. On the display you will see a rotating bar.

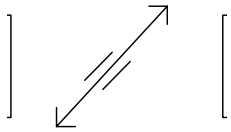

Turn the dosage *regulator*[6] on. Put the scope on "Xdelf." (X/Y) and check if you can also see the rotating bar on the scope.

13 Turn the *dosage regulator*[6] back to 0. Adjust the scope to 0,5 ms/div and (x/t). Go to the main menu via *button*[12] and select program 6. Select possibility 2 (random). Go to the submenu via *button*[13] and select 10. Go to the next submenu via *button*[13] and push *button B X*[10].

14 Turn up the dosage *regulator*[6] and check the type of current.

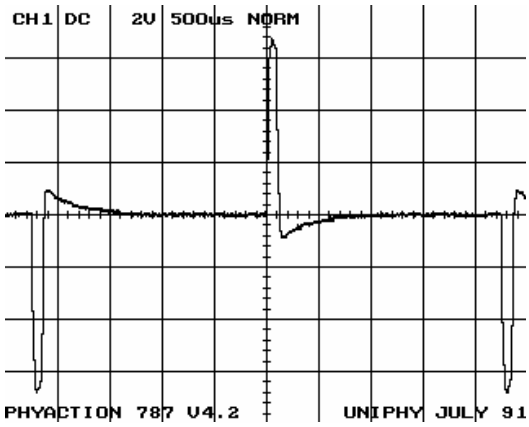

15 Remove the output plug and connect the vacuum meter to all tubeconnectors.
Select a program and turn the *vacuum regulator*[9] slowly to maximum.
- Check if the vacuum is properly adjustable up to 0,3 bar.
- When the vacuum reaches the 0,3 bar, then listen if the pump stops.
- Go to the vacuum adjustments via *button*[13] and select 2.
- Check if the vacuum reaches up to 0,5 bar and returns to 0,3 bar. This cycle lasts about 2 seconds.

16 Select *continuous vacuum*[10] 12 and release one of the tubes from the vacuum meter. Keep the tube closed (by folding it) and check if the tubeconnector is not choked. Put the tube back and check the other tube connectors in the same way.

17 Put the vacuum *regulator*[9] back to position 13 and remove the vacuum meter. Switch off the appliance with the *on/off switch*[17] en remove the mains cable.

1.2 Safety inspection

This inspection is for technical maintenance purposes only. It is recommended that this test is carried out once a year. When the appliance is serviced, the full IEC 601-1 tests have to be carried out. A short description of these tests is in section 3.3.

1.2.1 Visual inspection

Passed, when all applicable items are answered with YES.

	yes	no
Is the user manual there?		
Is the casing of the appliance undamaged?		
Is the label well readable?		
Are the controls, display, lights and connectors all right?		
Are the mains input and the equipotentiality busbar all right?		
Are the electrodes, cables and connectors undamaged?		

1.2.2 Functional test

Passed, when all applicable items are answered with YES.

	yes	no
Is the automatic selftest executed successfully at power on?		
Is an error message appearing when the appliance is powered on with the current dose potentiometer turned on?		
Is an error message appearing when the AC/DC-switch is changed with the dose potentiometer turned on?		
Do the current waveforms and amplitudes correspond with the data in the user manual when measured with an oscilloscope and a 500 Ω load?		

1.2.3 Test of the electrical safety according to VDE 0751

Parameter	Measured value	Limit	Remarks
Protective earth resistance	Ω	< 0,2 Ω	
Enclosure leakage current	µA	< 1000 µA	
Patient leakage current	µA	< 5000 µA	

1.3 IEC 601-1 safety tests

For the full description of these tests we refer to the IEC 601-1 (1988) for Class I, Type BF equipment. Here is just a short reminder list of the tests and the test limits.

Measurements	limits
Insulation resistance mains	> 2.0 MΩ
Insulation resistance applied part	> 2.0 MΩ
Protective earth resistance	< 0.2 Ω
Enclosure leakage current normal	< 100 µA
Enclosure leakage current open lead	< 500 µA
Enclosure leakage current open earth	< 500 µA
Enclosure leakage current reverse	< 100 µA
Enclosure leakage current open lead	< 500 µA
Enclosure leakage current open earth	< 500 µA
Earth leakage current normal	< 500 µA
Earth leakage current open lead	< 1000 µA
Earth leakage current reverse	< 500 µA
Earth leakage current open lead	< 1000 µA
Patient leakage current normal	< 100 µA
Patient leakage current open lead	< 500 µA
Patient leakage current open earth	< 500 µA
Patient leakage current reverse	< 100 µA
Patient leakage current open lead	< 500 µA
Patient leakage current open earth	< 500 µA
Mains on applied part normal	< 5000 µA
Mains on applied part reverse	< 5000 µA
Dielectric strength A.P. + CASE to MAINS during 1 minute or, *	> 1500 V_{rms}
Dielectric strength A.P. + CASE to MAINS during 1 second *	> 1800 V_{rms}
Dielectric strength MAINS + CASE to A.P. during 1 second *	> 1500 V_{rms}

* These tests need only be executed when repairs have been made in the mains part or in the output circuits.

CHAPTER 4 ADJUSTMENT PROCEDURES

On the main board and the control board several adjustments are located. Most of these adjustments are factory set, at the factory special software and test fixtures are used to be able to make the proper adjustments. No attempt should be made to alter these adjustments in the field with exception to the adjustments described below.

1.1 Vacuum adjustment

Required equipment : Multimeter with 300 mV range 1% or better
Vacuum and output test fixture or vacuum gauge (0..600mBar)

* Performance verification

Connect the testfixture (or a vacuum gauge) to the tube connectors.
Switch on the unit and turn the *vacuum regulator*[9] to maximum clockwise position.
Measure the vacuum, the value should be 300 mBar ± 30 mBar (300 mV ± 30).

* Adjustment procedure

Adjustments and measurements are done on the main board

step	adjustment
1	Switch of the unit, remove the powercord, and take off the cover of the unit.
2	Reconnect the powercord, connect the testfixture (or vacuum gauge)
3	Turn on the unit and turn the front panel *vacuum regulator*[9] to maximum clockwise position
4	Disconnect one of the terminals of the vacuum pump and let air in to the system by temporary removing one of the tubes. Watch out for the live mains connector !!!
5	Connect the multimeter high to MP31 and common to MP32 select the 300 mV range.
6	Adjust P402 for 100 mV ± 5 mV
7	Reconnect the pump.
8	Adjust the vacuum with P401 for 300 mBar ± 10 with the *vacuum regulator*[9] to maximum clockwise position.
9	Repeat steps 4 through 8 until both are correct.
10	Switch of the unit and remove the powercord.
11	Make sure the pump is connected before replacing the cover

1.2 Output control adjustment

Required equipment: Multimeter 0.1% or better, 1 Mohm input resistance or better

* Performance verification

This adjustment should be done when the control board and or the output control potentiometer has been replaced. Measure the voltage between MP1 and MP2 on PCB 7816; it should read between 4.50 and 4.52 Volt with the output control voltage potentiometer in off position (c.c.w.).

* Adjustment procedure (with cover removed)

Set the Output control potentiometer to off in the maximum counter clockwise position. Connect the

multimeter between output control potentiometer left hand side and MP1 (Control board). Adjust P1 on the control board for a reading between 4.50 and 4.52 Volt.

1.3 Adjustment points 782x Main board

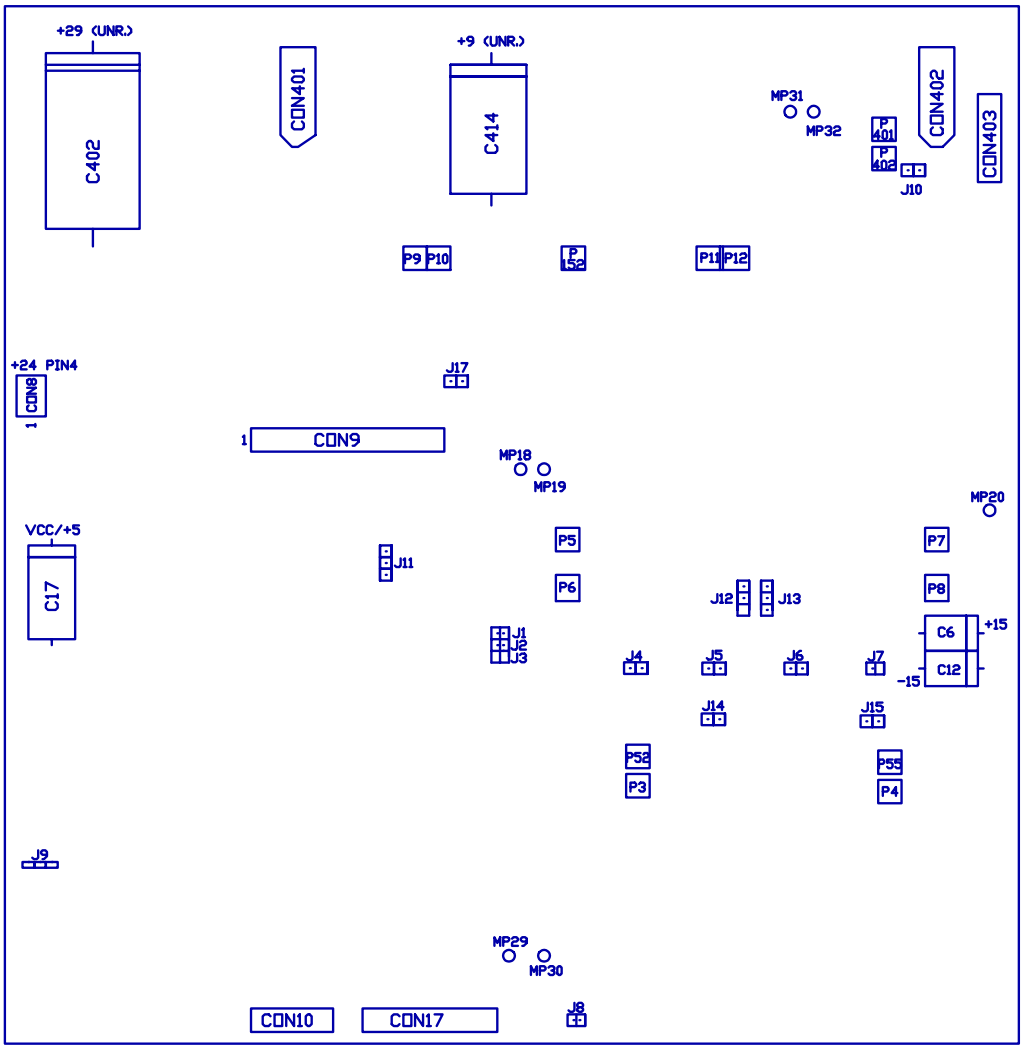

P 152 Adjustment point

J4 Jumper

MP30 Test point

1.4 Adjustment points 781x Control board

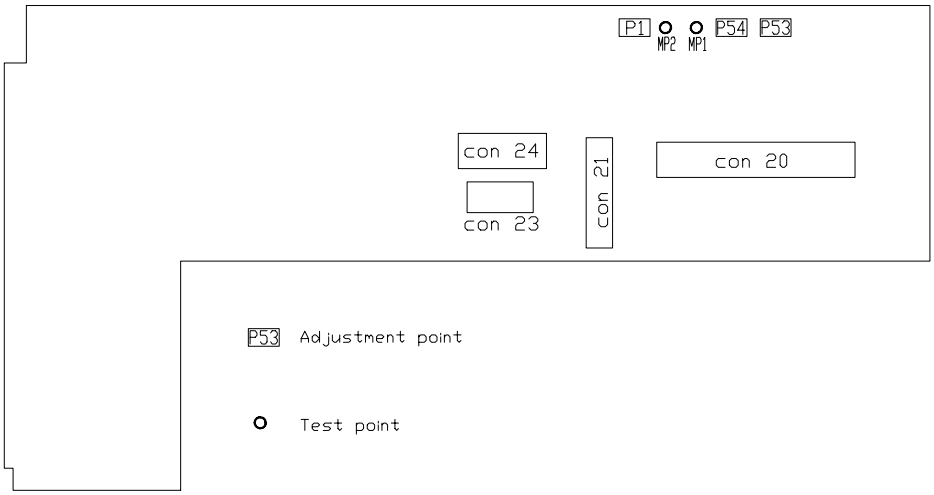

CHAPTER 1 TROUBLE SHOOTING

1.1 General

In the following two chapters a description is given of the most common error messages and their probable cause.

The following categories of Errors are identified:

- Errors during selftest
- Errors during normal use
- Software errors

With a number of errors a special message is displayed explaining in short what the detected problem is. All other errors are displayed in the following manner (the numbers are just an example and change per error):

```
    the processor detects a fault!!
-------------------------------------------
            switch off

ERROR:                    54
Nr:                  12
Adres:               45A0
```

The error numbers, on the line indicated by "ERROR:" are described in the next chapter on selftest. The number at the "Nr:" line gives in some occasions additional information about the error. The hexadecimal number on the line "Adres:" indicates the program counter position at the occurrence of the error. This is important in case of software errors. In cases the display is (probably) not available the processor will flash the monitor (yellow) led a number of times, description also in the next chapter.

1.2 Selftest

The selftest checks proper functioning of the safety relay and circuits and is activated every time the unit is switched on. The tests are performed by the microprocessor and lasts for approximately 2 seconds. The dosage regulator should be in the zero position (maximum counter clock wise). This is checked at regular intervals during the selftest. If the dosage regulator is not at zero an error will be reported (**ERROR 50** or **ERROR 54**) and an error shutdown procedure will be initiated as described below.

The safety relay driver circuitry is accessible to the microprocessor for 3 seconds after power up of the unit. After this period the microprocessor will not be able to switch the safety relay on any more. The control lines used for test purpose only are only accessible by the microprocessor if the dosage regulator is in the zero position as extra precaution against hard- or software errors.

1.3 ERROR shutdown procedure

The safety circuit will switch off the safety relay directly in the event of an error, thus disconnecting the output from the unit to external connections to avoid danger to the patient.
In addition to this the microprocessor will, if it detects an error either from the safety circuit or otherwise, perform the following actions:

- Safety relay off: Patient circuit disconnected. This is a latched condition that can only be reversed by switching off the unit.
- Dummy relay off: The output is short circuited. (This can only occur if the dosage regulator is at zero).
- Choppers off: No signal to the output stage.
- Dac's to zero: No signal to the choppers
- Red error-LED on
- Fan on
- An error message is displayed on the LCD screen. In some cases the yellow monitor-LED is pulsed in case the processor has not established communications with the LCD screen yet.

1.4 General test description

The microprocessor gathers its information via digital and analog inputs and these are tested first. Next the safety relay, dummy relay and safety limit circuits are tested. Finally some additional simple tests are performed.

In case the unit does not finish selftest, no error message is displayed, the monitor-LED is not pulsed and all internal wiring is connected properly the following items are suspect :

- Supplies (mains and other)
- Microprocessor
- Program EPROM
- Address, data or control lines

1.5 Microprocessor, analog inputs and supply voltages test

Any errors found will stop the selftest and an error message will be displayed. (or yellow monitor-LED pulsed)

The following tests are performed:

1. Errorline check. If the errorline is in error condition (safety relay switched off) the yellow LED will be pulsed 7 times.
2. Microprocessor internal register check. Data is written to the internal registers, read back and compared against the original data. Incase of a failure the yellow LED will flash 4 times (**ERROR 20**).
3. The microprocessor arithmetic and logic unit (ALU) check. In case of failure also the yellow LED will flash 4 times (**ERROR 20**).
4. Data storage test. The RAM is tested for writeabilty and data retention. This also checks address, data and read/write control lines. Incase of a failure the yellow LED will flash 5 times (**ERROR 22**).
5. Program storage test. By means of a checksum test on the first 48k (older versions 32k) the data integrity of the program stored in EPROM is tested. Incase of a failure the yellow LED will flash 6 times (**ERROR 21**).
6. Bank switch circuit. Incase of a failure the yellow LED will flash 8 times (**ERROR 28**).

7. LCD display. The processor checks if communications with the display controller can be

activated. Incase of a failure the yellow LED will flash 11 times fast.

8 Initial power up conditions:
ERRORline not activated. If activated **ERROR 57**
Dosage regulator at zero, checked by means of the potentiometer switch. If not at zero **ERROR 50** (check cables if the control is at 0 position)

9 The timers (U22, U24, 8155). The processor starts each timer with a preset time and compares it against a programmed delay loop with the same time delay. If U22 fails **ERROR 31**, if U24 fails **ERROR 32**

10 ADC U17, An reference voltage from U21 (Vref, 2.53 Volt) is converted and checked against a stored value. A conversion result below 2.39 Volt results in **ERROR 30**, above 2.63 Volt in **ERROR 37**, and if EOC remains high **ERROR 38**

11 Supply voltages +24V, +15V and -15V through a resistive network. If the summing point of the resistive network is below 1.16 V or above 3.47 V **ERROR 53** is reported.

12 Dosage regulator output signal. This should be at or close to 0. A voltage above 0.2 V results in **ERROR 54**

13 Microprocessor interrupt lines 6.5 and 7.5 . Three error messages may occur. **ERROR 24** if one or both lines are active before activated. **ERROR 25** if 6.5 does not activate. **ERROR 26** if 7.5 does not activate.

14 The bootstrapped supply voltages to the voltage to current converters are checked for quiescent level, above 6.1 V and below 8 V. A failure on channel A results in **ERROR 60** a failure on channel B in **ERROR 70**. The error message indicates the converted value.

With the above tests the microprocessor, analog inputs and supply voltages have been tested

1.6 Safety and dummy relay test

In the following test sequence the safety and dummy relay's are tested for proper functioning. No external (patient) connection should exist during this test. The DAC is programmed in such a way that with a test reference voltage applied via the TEST line approximately 2 mA DC will flow through the output circuit, if connected either through an external connection or the dummy relay. The voltage level at the bootstrapped power supply is proportionate to the resistance in the output (patient) circuit with a given current. This level is used to test the output circuit resistance. A voltage on this point below 10.9 V if checking for an open circuit is recognized as an error. A voltage above 8.25 V while testing for a closed circuit is recognized as error.

When the safety relay is energized (on) the contacts in both channels are closed. With the dummy relay will short circuit the output channels if in energized (on) state. The initial condition of the relays prior to test is safety relay off dummy relay on

1 Test if the safety relay is off. A low current (apr. 2 mA) is applied to the output circuit. If a closed circuit is detected on channel A **ERROR 61** will occur, on channel B **ERROR 71**.

2 Test if errorline becomes activated if the safety relay is switched on. If the error line is activated it means that the safety circuit has activated it and **ERROR 55** will occur.

3 Test if the safety relay makes contact. With the safety relay on and the dummy relay on a closed circuit should exist. An open on channel A will result in **ERROR 62** and an open on channel B **ERROR 72**

4 Test for external (patient) connections. When the dummy relay is switched off the output circuit should be open again. A closed circuit indicates an external connection. **ERROR 63** for channel A and **ERROR 73** for channel B. Only the normal outputs are tested, not the vacuum outputs.

5 Test if dummy relay makes contact. After energizing the dummy relay the outputs should be shorted. If channel A is open **ERROR 64** occurs, if channel B is open **ERROR 74**

If these tests have passed the safety and dummy relay are functioning and no external connections

exist. In the next test the safety relay is tested under full load conditions. The DAC's are programmed for an output current of 110% maximum operating current.

1 Test if the safety relay switches under full load. When the safety relay is switched on the safety limit check circuits should activate the errorline causing the safety relay to drop off. If the errorline is not activated **ERROR 65** is generated for channel A and **ERROR 75** for channel B. In both cases the value in the error message is 0
2 Test if the safety relay contacts open. If the above test passes but a closed circuit is detected (bootstrapped power supply voltage below 20.7 V) the same errors are generated **ERROR 65** for channel A and **ERROR 75** for channel B. This time however the actual voltage level of the bootstrapped power supply is given in the error message.

This test completes the verification of the safety relay.

1.7 150% safety limit check

In this test sequence the 150% comparator circuits are tested. The safety relay is energized and a closed output circuit is created by switching off the dummy relay. By programming the DAC two currents are generated one representing a value below 150% (1.5 mA) and one above 150% (8 mA). The limit checks are done on each half of the output stage for each channel.

1 Test with a current below 150% if no error condition is generated. If an error is generated for channel A **ERROR 66** is reported, and **ERROR 76** for channel B. The value reported at this test is 0
2 Test one half of each channel (comparator 1) for 150% limit. If the errorline is not activated with the 150% current **ERROR 66** is generated for channel A and **ERROR 76** for channel B. To distinguish these errors from the previous a value of 1 is reported.
3 Test the other half of each channel (comparator 2) for 150% limit. The error messages are also **ERROR 66** and **ERROR 67** for channel A and channel B. The value reported is 2

This completes the verification of the 150% limit check circuits.

1.8 Maximum current safety limit check

This comparator checks for currents above the maximum allowable output current and should report an error if the output current rises above 110% of the maximum allowable. The maximum current is simulated by test lines connected to the comparator network.

1 Simulate normal current with test lines TST1 (channel A) and TST3 (channel B). If the errorline is activated **ERROR 67** will be generated for channel A and **ERROR 77** for channel B. The reported value is 0. This also checks if the 11 Kohm input resistors are installed.
2 Simulate 110% current with TST2 & TST3. If the errorline is not activated **ERROR 67** for channel A and **ERROR 77** for channel B is generated. The reported value is 1.

This completes the maximum current safety limit (LIMIET) check

1.9 Other tests

Next is the test of the dosage regulator output signal by means of TST5 test line. **ERROR 56** is generated if the errorline is not activated. After completion of this test the safety relay is switched on and the dummy relay off.

Next a checksum test of the EPROM is executed. Up to version 2.xx the second bank is tested. From version 3.0 on banks 3, 4 and 5 are tested. If an error is found **ERROR 27** is reported with a value equivalent to the bank found at fault.

Finally a test is done at a specific location of the battery backed up RAM. If the data in this location

does not conform with the test value the RAM has lost data. The message "THE DEFAULT MEMORY IS NOT OK, check the back-up battery, data in memory lost."

For software versions from 3.3 and up some additional tests have been added:

1. Serial bus test. If a test connector, looping the output signal back to the input, is connected to the serial communication port the message:
   UART LOOP-BACK CONNECTED, the uart works, please remove the test plug.
   is displayed if the test passes. No message will be displayed if the test fails or if no test connector is installed !!
2. Optocoupler test. The voltage returned from the optocouplers for high resistance check (patient circuit resistance) must be between 3.75 V and 4.25 V. **ERROR 42** for channel A and **ERROR 43** for channel B will be generated in case this test fails. The actual measured voltage is reported with the error message

1.10 ERROR numbers summary

Processor system and LCD, 10 .. 28

Led on (qty)	Description
4	The processor is in error
5	The 64K bit SRAM is faulty
6	The 512K bit EPROM is faulty
7	The safety-relay is not active
8	The bank switch is not functioning properly
11(fast)	The display is not connected/functioning

ERRORnumber	Description
10 .. 14	Software errors, contact Uniphy !
20	8085 Selftest error
21	Checksum bank 0 error
22	RAM test error
23	TRAP interrupt activated
24	Interrupt line 65 of 75 to early high
25	Interrupt 65 remains low
26	Interrupt 75 remains low
27	Checksum other banks error
28	Bankswitch not functioning

Processor peripherals 30 .. 41

ERRORnumber	Description
30	The EOC output of the ADC stays idle (timeout) (clock running? measure EOC)
31	Timer 1 (U22, 81C55-1) counting to short/long (8155 defect? measure clock input, measure Tout).
32	Timer 2 (U24, 81C55-2) counting to short/long
34	The SIO not functioning
35	Noise on an input line of port c of U22 (measure).
36	Noise on an input line of port c of U24.
37	The Vref2 input of the ADC is to high/low (measure 2.53V)
38	The EOC input of the ADC stays high
40	ADC timeout during normal use
41	LCD timeout
42	Optocoupler failure channel A
43	Optocoupler failure channel B

Safety-circuit 50 .. 77

Most safety-circuit messages can only appear at power up of the unit during selftest.
During normal use only the temperature, the water reservoir and the error line are checked (message 58, 52 and 51).

The errors 50 to 58 are not limited to one channel.

ERRORnumber	Description
50	Output control not zero during selftest (a specific message appears on the display)
51	The error line is activated
52	Water reservoir full (a water reservoir symbol appears on the display)
53	Supply voltage incorrect. The sum of the supply voltages should be between 1.1 and 3.4V (ADC channel 5).
54	The output control supply voltage measured by the ADC is not 0V during the selftest.
55	Error line remains active during selftest; error shutdown is activated
56	Output check not functioning
57	The error line is not active during power up, RESET should activate the line.
58	Temperature of the heatsink to high (check temperature sensor KTY83) the temperature limits are (7826): 83 degrees C : error message 55 degrees C : fan on 40 degrees C : fan off (if switched on)

The output of the bootstrapped supply to the U/I convertors is measured with the ADC through a divider network. Some of the error messages give the ADC value on line Nr:. To calculate the measured voltage for VkanA or VkanB divide the reading by 9.2

ERRORnumber A B	Description
60, 70	VkanA/VkanB incorrect. If the choppers are off the value should be around 7V . Nr: value= DC value VkanA/B
61, 71	Safety-relay not in the correct state (off). Value= ADC value VkanA/B. Because the relay is open the patient path resistance should be 50K and VkanA/VkanB high at a low current.
62, 72	Safety-relay does not switch. Value= ADC value VkanA/B. Because the dummy relay is closed (output shorted) the value of VkanA or VkanB should be low with a low current and closed safety relay.
63, 73	Patient connected (special screen). With an open dummy relay and no error the patient path resistance should be 50 Kohm.
64, 74	Short not functioning. Value= ADC value of VkanA/B. the patient path resistance should be 0.
65, 75	Safety-relay does not switch at maximum current
66, 76	150% limit check not functioning. Value 0: activated before 150% is reached 1: is not activated with a positive pulse (set chopper flip-flop, SCHABIT, active) 2: is not activated with a negative pulse (clear chopper flip-flop, SCHABIT, active)
67, 77	Maximum output limit check not functioning. Value 0: activated before maximum output is reached (line test2/3 active) 1: remains inactive (line test1/4 active) (comparator not functioning).

Other error numbers

No other error numbers should occur, in case it does pleas notify Uniphy with the exact details of the error message.

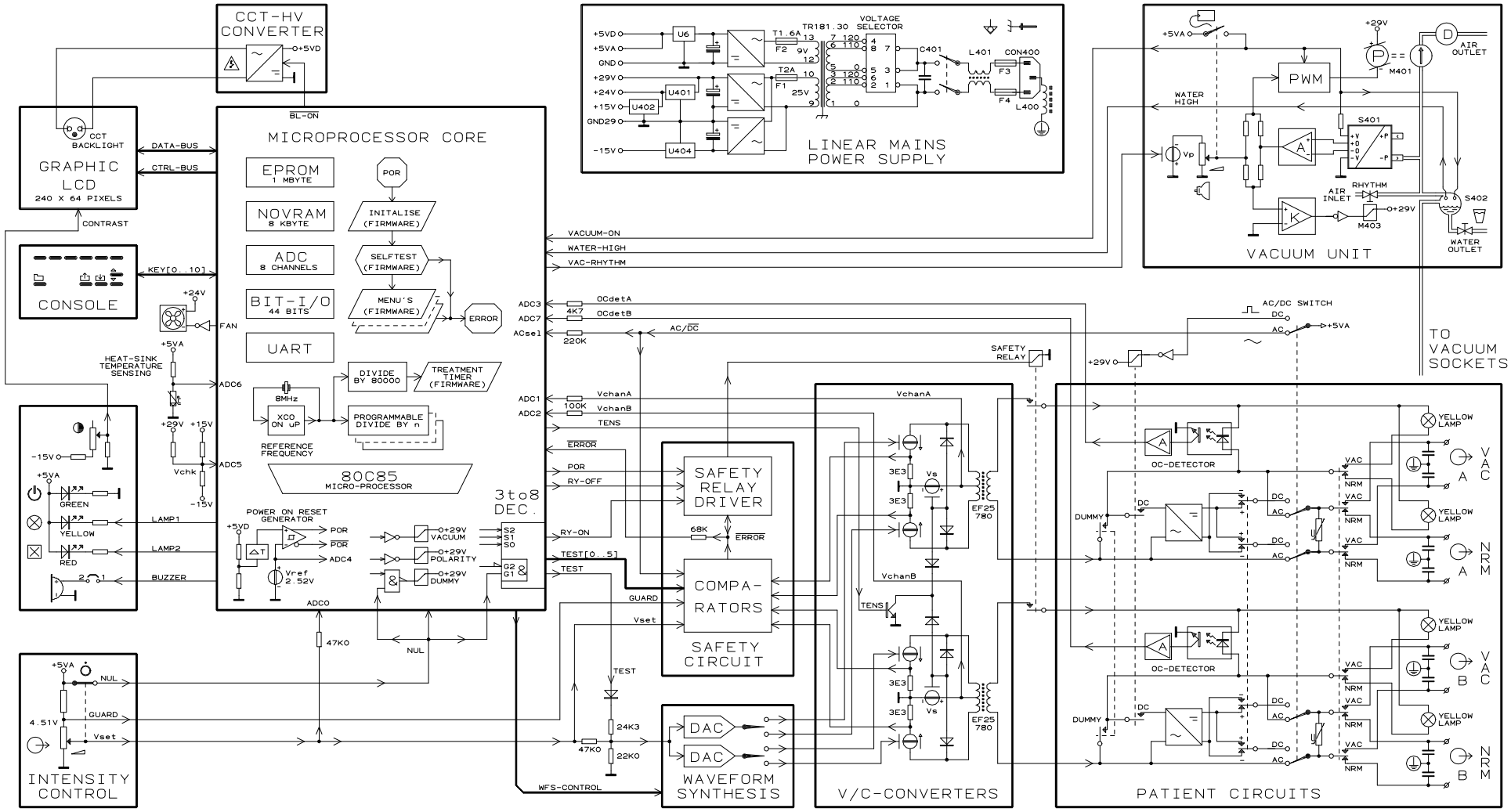

Property of: UNIPHY B.V. THE NETHERLANDS
Drawn by: N.H. Beun
Approval:

Title: BLOCK DIAGRAM 780

Size	Document Number	REV
C	7800BLK0.SHT	E

Date: September 22, 1998 Sheet 2 of 33

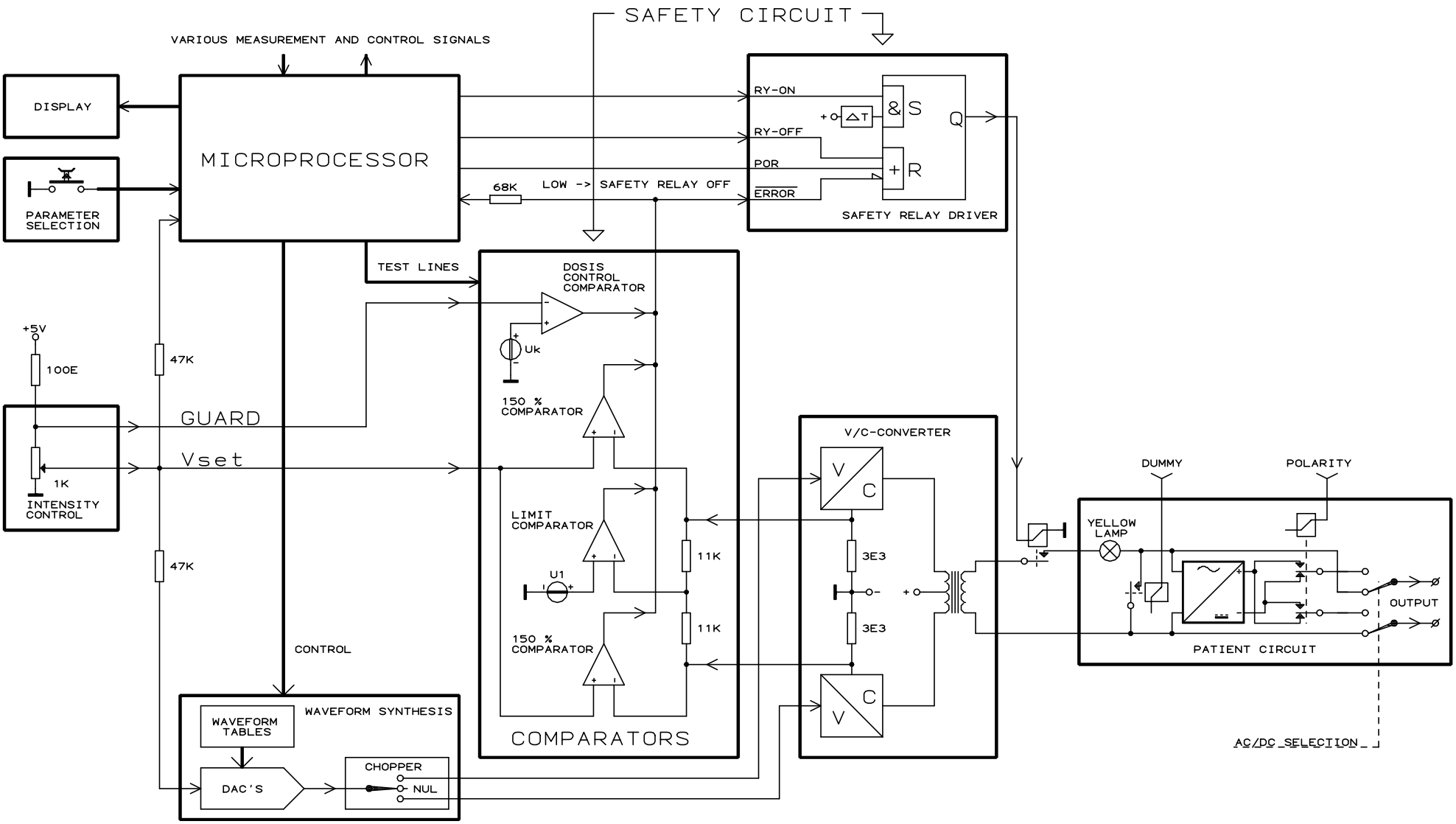

PRINCIPLE OF OPERATION

(ONLY ONE CHANNEL SHOWN)

Property of: UNIPHY B.V. THE NETHERLANDS	
Drawn by: N.H. Beun	
Approval:	
Title	780 PRINCIPLE OF OPERATION
Size B	Document Number 7800BLK1.SHT — REV E
Date: January 22, 1996	Sheet 3 of 33

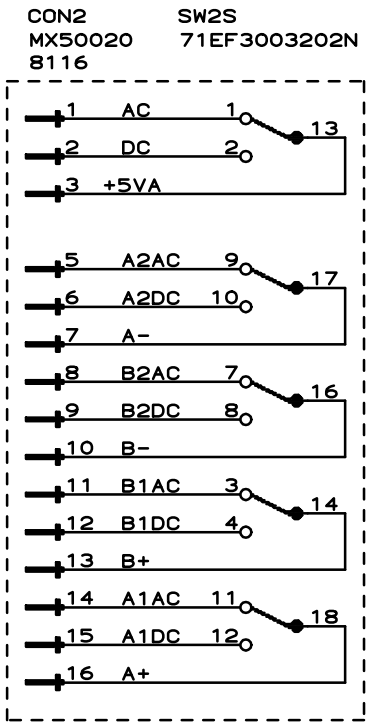

SW2-ASSEMBLY
(7819S)

W122
TO CON9
(782*)

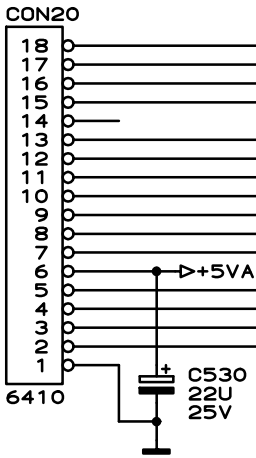

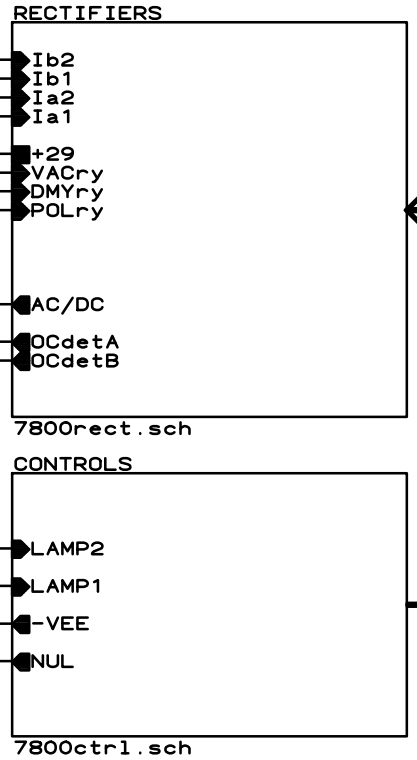

TO CON24
W310
(783*)

W123
TO CON403
(782*)

Property of: UNIPHY B.V. THE NETHERLANDS
Drawn by: N.H. Beun
Approval:
Location: PCB 781*

Title
780 FRONT BOARD 7819

Size	Document Number	REV
A	7800PCB1.SCH	E

Date: November 8, 1995 Sheet 7 of 33

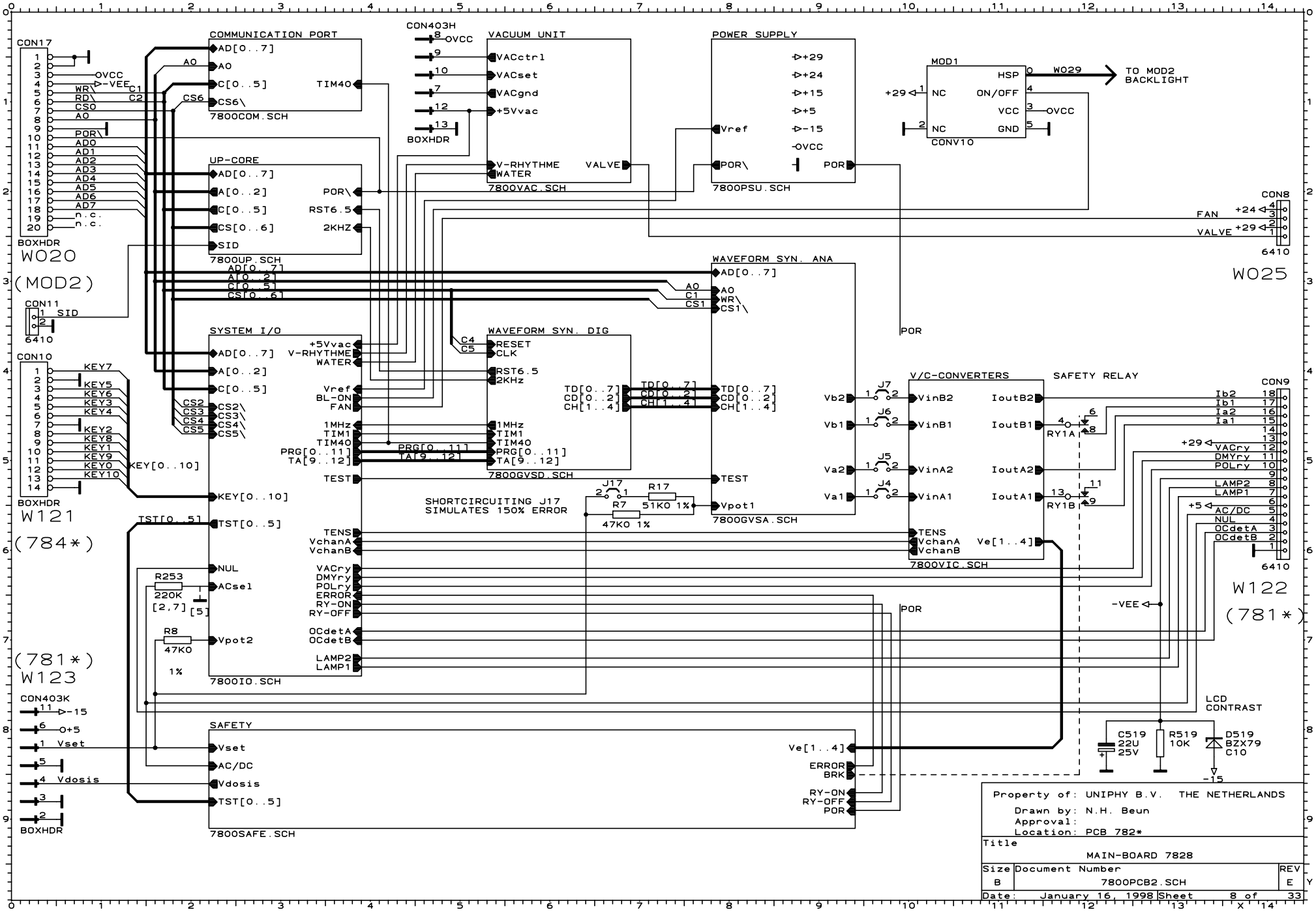
COMMUNICATION PORT
7800COM.SCH
UP-CORE
7800UP.SCH
VACUUM UNIT
7800VAC.SCH
POWER SUPPLY
7800PSU.SCH
MOD1
CONV10
TO MOD2 BACKLIGHT
CON17
BOXHDR
W020
(MOD2)
CON403H
BOXHDR
CON8
6410
W025
CON11
6410
WAVEFORM SYN. ANA
SYSTEM I/O
WAVEFORM SYN. DIG
7800GVSD.SCH
7800GVSA.SCH
V/C-CONVERTERS
7800VIC.SCH
SAFETY RELAY
CON10
BOXHDR
W121
(784*)
SHORTCIRCUITING J17
SIMULATES 150% ERROR
7800IO.SCH
CON9
6410
W122
(781*)
(781*)
W123
CON403K
BOXHDR
SAFETY
7800SAFE.SCH
LCD CONTRAST
C519 22U 25V
R519 10K
D519 BZX79 C10
Property of: UNIPHY B.V. THE NETHERLANDS
Drawn by: N.H. Beun
Approval:
Location: PCB 782*
Title
MAIN-BOARD 7828
Size B
Document Number 7800PCB2.SCH
REV E
Date: January 16, 1998
Sheet 8 of 33

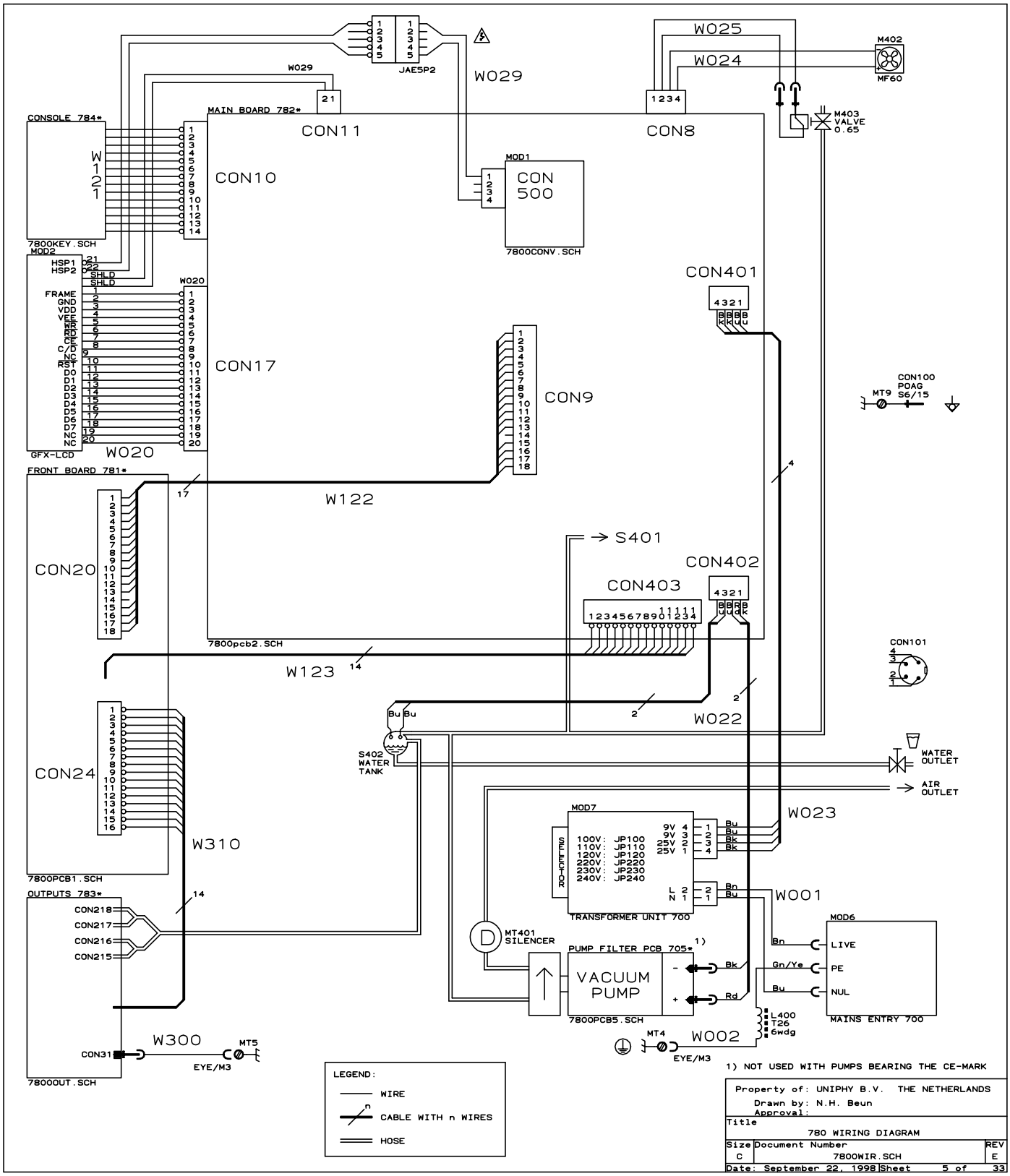
JAE5P2
W029
W025
W024
M402
MF60
M403
VALVE
0.65
CONSOLE 784*
MAIN BOARD 782*
CON11
CON8
CON10
MOD1
CON
500
7800CONV.SCH
7800KEY.SCH
MOD2
HSP1
HSP2
SHLD
FRAME
GND
VDD
WE
WR
RD
CE
C/D
NC
RST
D0
D1
D2
D3
D4
D5
D6
D7
GFX-LCD
W020
CON17
CON401
CON9
CON100
POAG
S6/15
MT9
FRONT BOARD 781*
W122
CON20
S401
CON402
CON403
7800pcb2.SCH
CON101
W123
W022
S402
WATER
TANK
WATER
OUTLET
AIR
OUTLET
CON24
W310
MOD7
100V: JP100
110V: JP110
120V: JP120
220V: JP220
230V: JP230
240V: JP240
TRANSFORMER UNIT 700
W023
W001
7800PCB1.SCH
OUTPUTS 783*
CON218
CON217
CON216
CON215
MT401
SILENCER
PUMP FILTER PCB 705*
VACUUM
PUMP
7800PCB5.SCH
MOD6
LIVE
PE
NUL
MAINS ENTRY 700
L400
T26
6wdg
W300
MT5
EYE/M3
CON31
78000UT.SCH
MT4
W002
EYE/M3
1) NOT USED WITH PUMPS BEARING THE CE-MARK
LEGEND:
WIRE
CABLE WITH n WIRES
HOSE
Property of: UNIPHY B.V. THE NETHERLANDS
Drawn by: N.H. Beun
Approval:
Title
780 WIRING DIAGRAM
Size C
Document Number 7800WIR.SCH
REV E
Date: September 22, 1998
Sheet 5 of 33

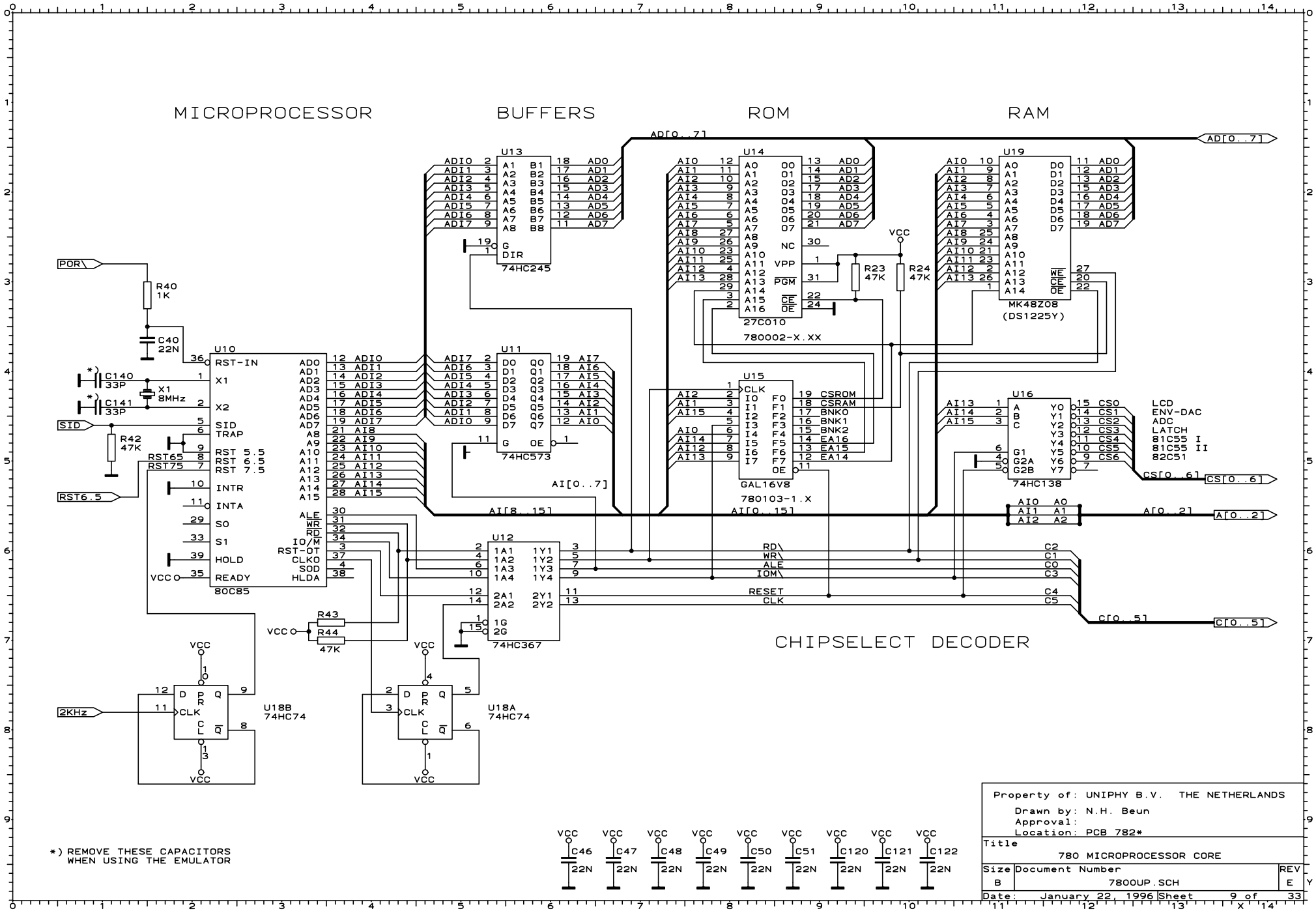
MICROPROCESSOR
BUFFERS
ROM
RAM
CHIPSELECT DECODER
U10
80C85
U11
74HC573
U12
74HC367
U13
74HC245
U14
27C010
780002-X.XX
U15
GAL16V8
780103-1.X
U16
74HC138
U18A
74HC74
U18B
74HC74
U19
MK48Z08
(DS1225Y)
LCD
ENV-DAC
ADC
LATCH
81C55 I
81C55 II
82C51
*) REMOVE THESE CAPACITORS
WHEN USING THE EMULATOR
Property of: UNIPHY B.V. THE NETHERLANDS
Drawn by: N.H. Beun
Approval:
Location: PCB 782*
Title
780 MICROPROCESSOR CORE
Size B
Document Number 7800UP.SCH
REV E
Date: January 22, 1996
Sheet 9 of 33

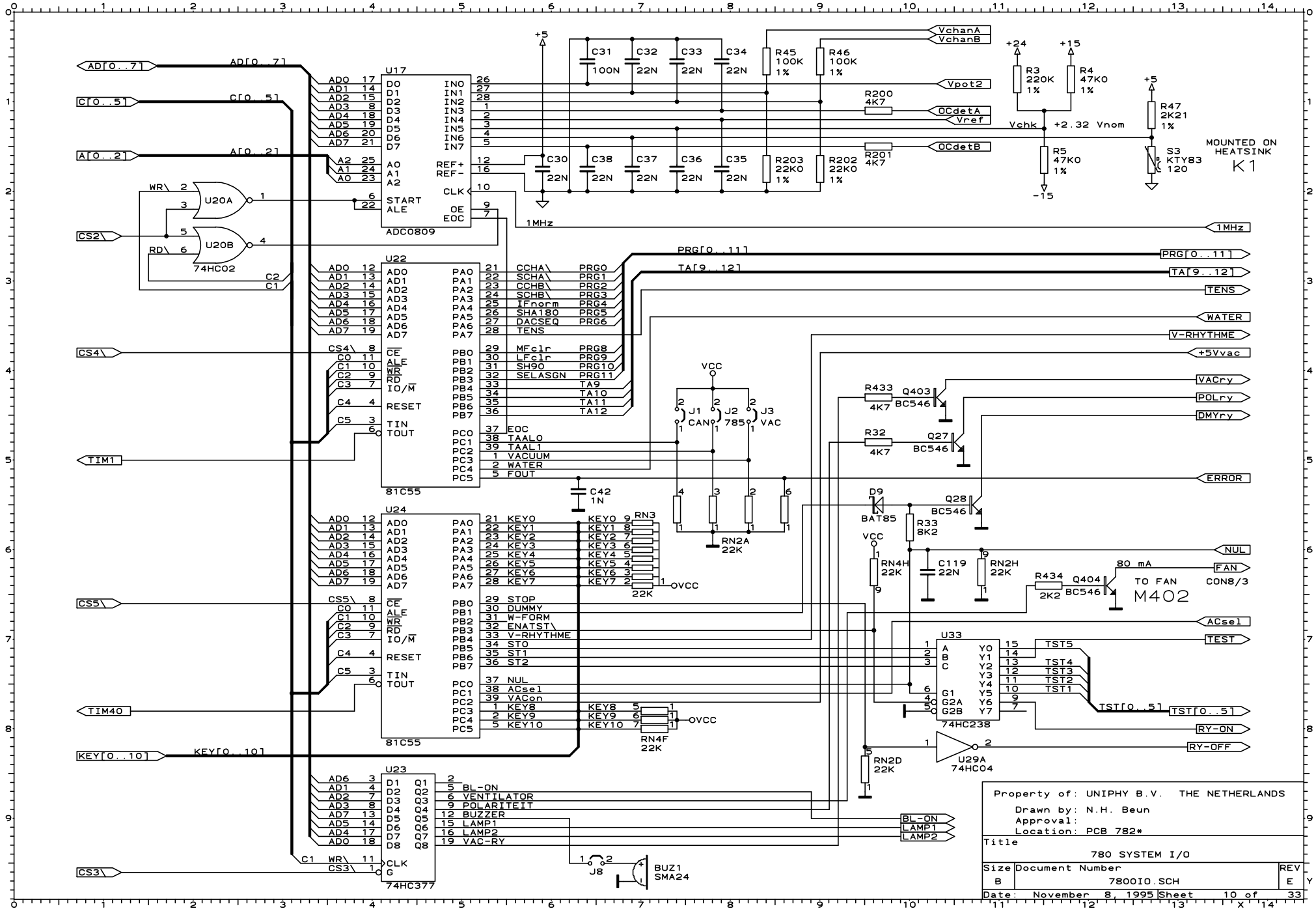
U17
ADC0809
U20A
U20B
74HC02
U22
81C55
U24
81C55
U23
74HC377
U33
74HC238
U29A
74HC04
J1 CAN
J2 785
J3 VAC
J8
BUZ1
SMA24
Q403 BC546
Q27 BC546
Q28 BC546
Q404 BC546
D9 BAT85
80 mA
TO FAN
M402
CON8/3
K1
MOUNTED ON HEATSINK
S3 KTY83 120
Property of: UNIPHY B.V. THE NETHERLANDS
Drawn by: N.H. Beun
Approval:
Location: PCB 782*
Title
780 SYSTEM I/O
Size B
Document Number 7800IO.SCH
REV E
Date: November 8, 1995
Sheet 10 of 33

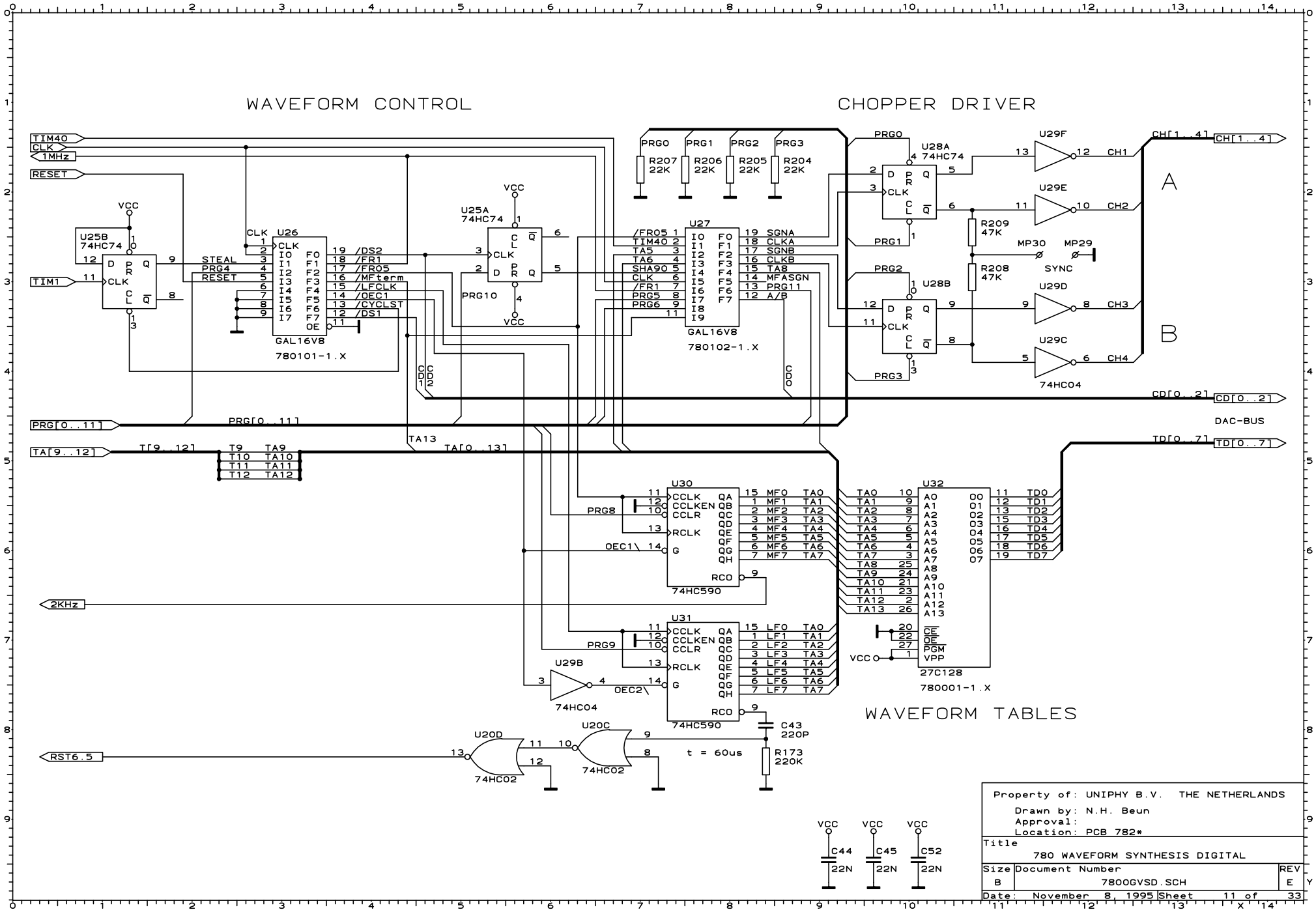
WAVEFORM CONTROL
CHOPPER DRIVER
WAVEFORM TABLES
TIM40
CLK
1MHz
RESET
TIM1
STEAL
PRG4
RESET
U25B 74HC74
U26 GAL16V8 780101-1.X
U25A 74HC74
PRG10
U27 GAL16V8 780102-1.X
/FR05
TIM40
TA5
TA6
SHA90
CLK
/FR1
PRG5
PRG6
/DS2
/FR1
/FR05
/MFterm
/LFCLK
/OEC1
/CYCLST
/DS1
SGNA
CLKA
SGNB
CLKB
TA8
MFASGN
PRG11
A/B
PRG0
PRG1
PRG2
PRG3
R207 22K
R206 22K
R205 22K
R204 22K
U28A 74HC74
U28B
R209 47K
R208 47K
MP30
MP29
SYNC
U29F
U29E
U29D
U29C
74HC04
CH1
CH2
CH3
CH4
A
B
CH[1..4]
CD[0..2]
DAC-BUS
TD[0..7]
PRG[0..11]
TA[9..12]
T[9..12]
T9 TA9
T10 TA10
T11 TA11
T12 TA12
TA13
TA[0..13]
U30 74HC590
U31 74HC590
PRG8
PRG9
OEC1\
OEC2\
2KHz
U29B 74HC04
U20D 74HC02
U20C 74HC02
RST6.5
C43 220P
R173 220K
t = 60us
U32 27C128 780001-1.X
CE
OE
PGM
VPP
C44 22N
C45 22N
C52 22N
Property of: UNIPHY B.V. THE NETHERLANDS
Drawn by: N.H. Beun
Approval:
Location: PCB 782*
Title
780 WAVEFORM SYNTHESIS DIGITAL
Size B
Document Number 7800GVSD.SCH
REV E
Date: November 8, 1995
Sheet 11 of 33

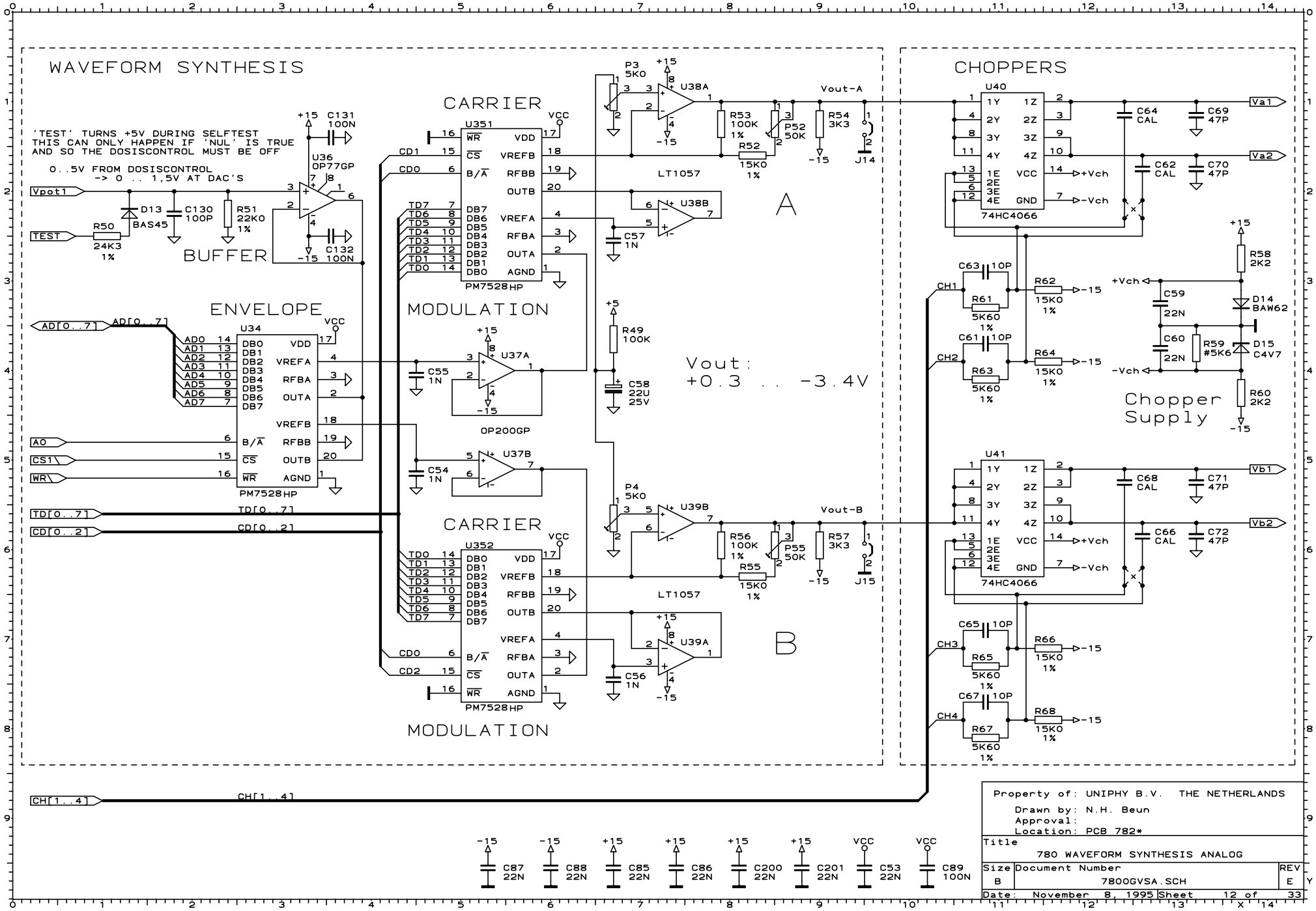
WAVEFORM SYNTHESIS
'TEST' TURNS +5V DURING SELFTEST
THIS CAN ONLY HAPPEN IF 'NUL' IS TRUE
AND SO THE DOSISCONTROL MUST BE OFF
0..5V FROM DOSISCONTROL
-> 0 .. 1,5V AT DAC'S
Vpot1
TEST
R50 24K3 1%
D13 BAS45
C130 100P
R51 22K0 1%
U36 OP77GP
C131 100N
C132 100N
BUFFER
ENVELOPE
U34
PM7528HP
AD[0..7]
A0
CS1\
WR\
TD[0..7]
CD[0..2]
CH[1..4]
CARRIER
U351
U352
MODULATION
U37A
U37B
OP200GP
C55 1N
C54 1N
C57 1N
C56 1N
C58 22U 25V
R49 100K
P3 5K0
P4 5K0
U38A
U38B
U39A
U39B
LT1057
R53 100K 1%
R52 15K0 1%
P52 50K
R54 3K3
R56 100K 1%
R55 15K0 1%
P55 50K
R57 3K3
Vout-A
Vout-B
J14
J15
Vout:
+0.3 .. -3.4V
A
B
CHOPPERS
U40
U41
74HC4066
C64 CAL
C69 47P
C62 CAL
C70 47P
C68 CAL
C71 47P
C66 CAL
C72 47P
Va1
Va2
Vb1
Vb2
+Vch
-Vch
C63 10P
C61 10P
C65 10P
C67 10P
R61 5K60 1%
R63 5K60 1%
R65 5K60 1%
R67 5K60 1%
R62 15K0 1%
R64 15K0 1%
R66 15K0 1%
R68 15K0 1%
CH1
CH2
CH3
CH4
R58 2K2
R60 2K2
C59 22N
C60 22N
R59 #5K6
D14 BAW62
D15 C4V7
Chopper Supply
C87 22N
C88 22N
C85 22N
C86 22N
C200 22N
C201 22N
C53 22N
C89 100N
Property of: UNIPHY B.V. THE NETHERLANDS
Drawn by: N.H. Beun
Approval:
Location: PCB 782*
Title
780 WAVEFORM SYNTHESIS ANALOG
Size B
Document Number 7800GVSA.SCH
REV E
Date: November 8, 1995
Sheet 12 of 33

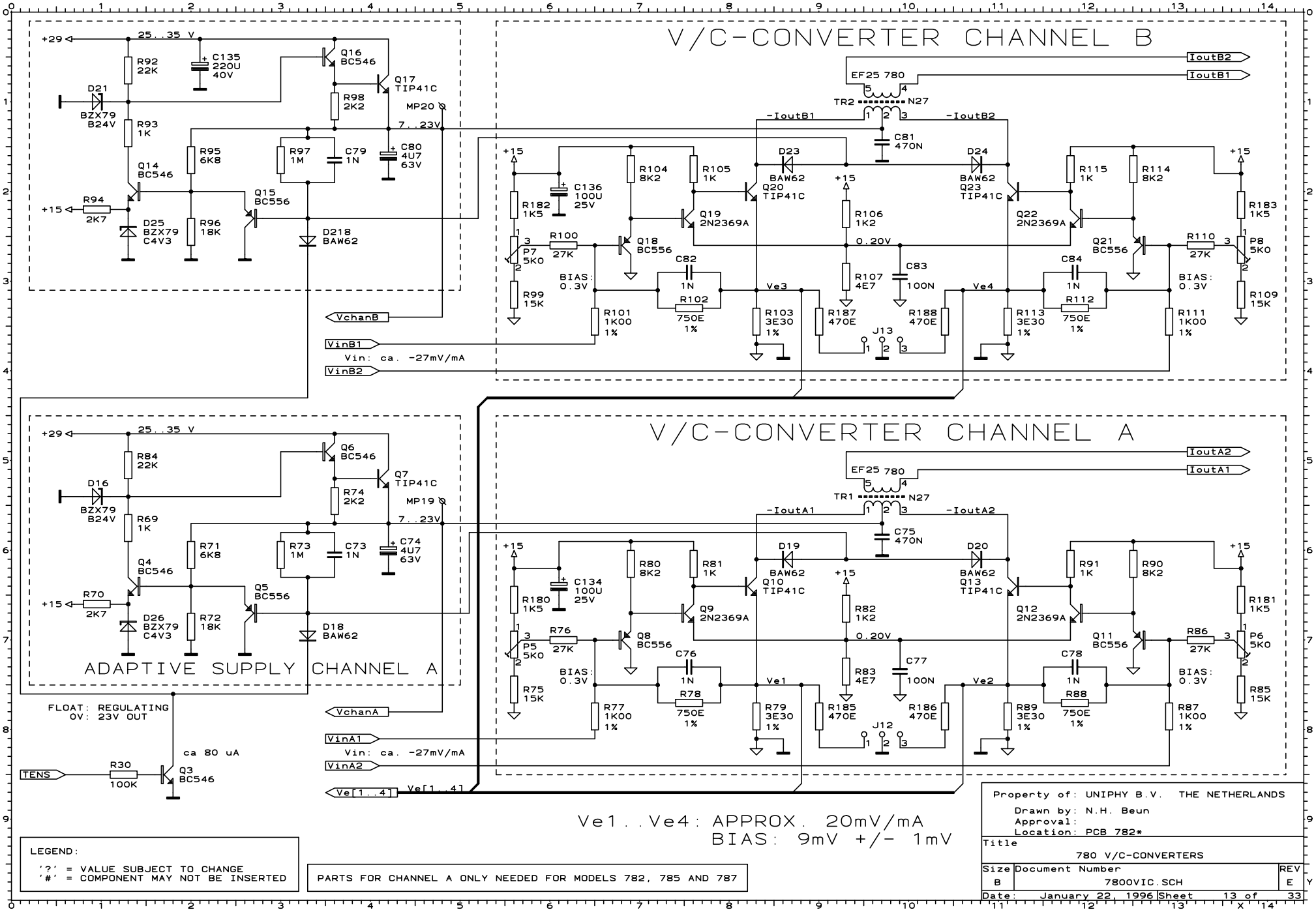
V/C-CONVERTER CHANNEL B
V/C-CONVERTER CHANNEL A
ADAPTIVE SUPPLY CHANNEL A
+29
25..35 V
R92 22K
C135 220U 40V
Q16 BC546
Q17 TIP41C
D21 BZX79 B24V
R98 2K2
MP20
7..23V
R93 1K
R95 6K8
R97 1M
C79 1N
C80 4U7 63V
Q14 BC546
R94 2K7
+15
Q15 BC556
D25 BZX79 C4V3
R96 18K
D218 BAW62
VchanB
VinB1
Vin: ca. -27mV/mA
VinB2
IoutB2
IoutB1
EF25 780
TR2
N27
-IoutB1
-IoutB2
C81 470N
D23 BAW62
D24 BAW62
Q20 TIP41C
Q23 TIP41C
R104 8K2
R105 1K
R115 1K
R114 8K2
R182 1K5
C136 100U 25V
R106 1K2
Q19 2N2369A
Q22 2N2369A
R183 1K5
R100 27K
Q18 BC556
Q21 BC556
R110 27K
P8 5K0
P7 5K0
0.20V
C82 1N
C83 100N
C84 1N
BIAS: 0.3V
R99 15K
R107 4E7
R102 750E 1%
R112 750E 1%
R109 15K
Ve3
Ve4
R101 1K00 1%
R103 3E30 1%
R187 470E
R188 470E
J13
R113 3E30 1%
R111 1K00 1%
IoutA2
IoutA1
TR1
-IoutA1
-IoutA2
C75 470N
D19 BAW62
D20 BAW62
Q10 TIP41C
Q13 TIP41C
R80 8K2
R81 1K
R91 1K
R90 8K2
R180 1K5
C134 100U 25V
R82 1K2
Q9 2N2369A
Q12 2N2369A
R181 1K5
R76 27K
Q8 BC556
Q11 BC556
R86 27K
P6 5K0
P5 5K0
C76 1N
C77 100N
C78 1N
R75 15K
R83 4E7
R78 750E 1%
R88 750E 1%
R85 15K
Ve1
Ve2
R77 1K00 1%
R79 3E30 1%
R185 470E
R186 470E
J12
R89 3E30 1%
R87 1K00 1%
R84 22K
Q6 BC546
Q7 TIP41C
D16 BZX79 B24V
R74 2K2
MP19
R69 1K
R71 6K8
R73 1M
C73 1N
C74 4U7 63V
Q4 BC546
R70 2K7
Q5 BC556
D26 BZX79 C4V3
R72 18K
D18 BAW62
VchanA
VinA1
Vin: ca. -27mV/mA
VinA2
Ve[1..4]
FLOAT: REGULATING
0V: 23V OUT
ca 80 uA
TENS
R30 100K
Q3 BC546
Ve1..Ve4: APPROX. 20mV/mA
BIAS: 9mV +/- 1mV
LEGEND:
'?' = VALUE SUBJECT TO CHANGE
'#' = COMPONENT MAY NOT BE INSERTED
PARTS FOR CHANNEL A ONLY NEEDED FOR MODELS 782, 785 AND 787
Property of: UNIPHY B.V. THE NETHERLANDS
Drawn by: N.H. Beun
Approval:
Location: PCB 782*
Title
780 V/C-CONVERTERS
Size B
Document Number 7800VIC.SCH
REV E
Date: January 22, 1996
Sheet 13 of 33

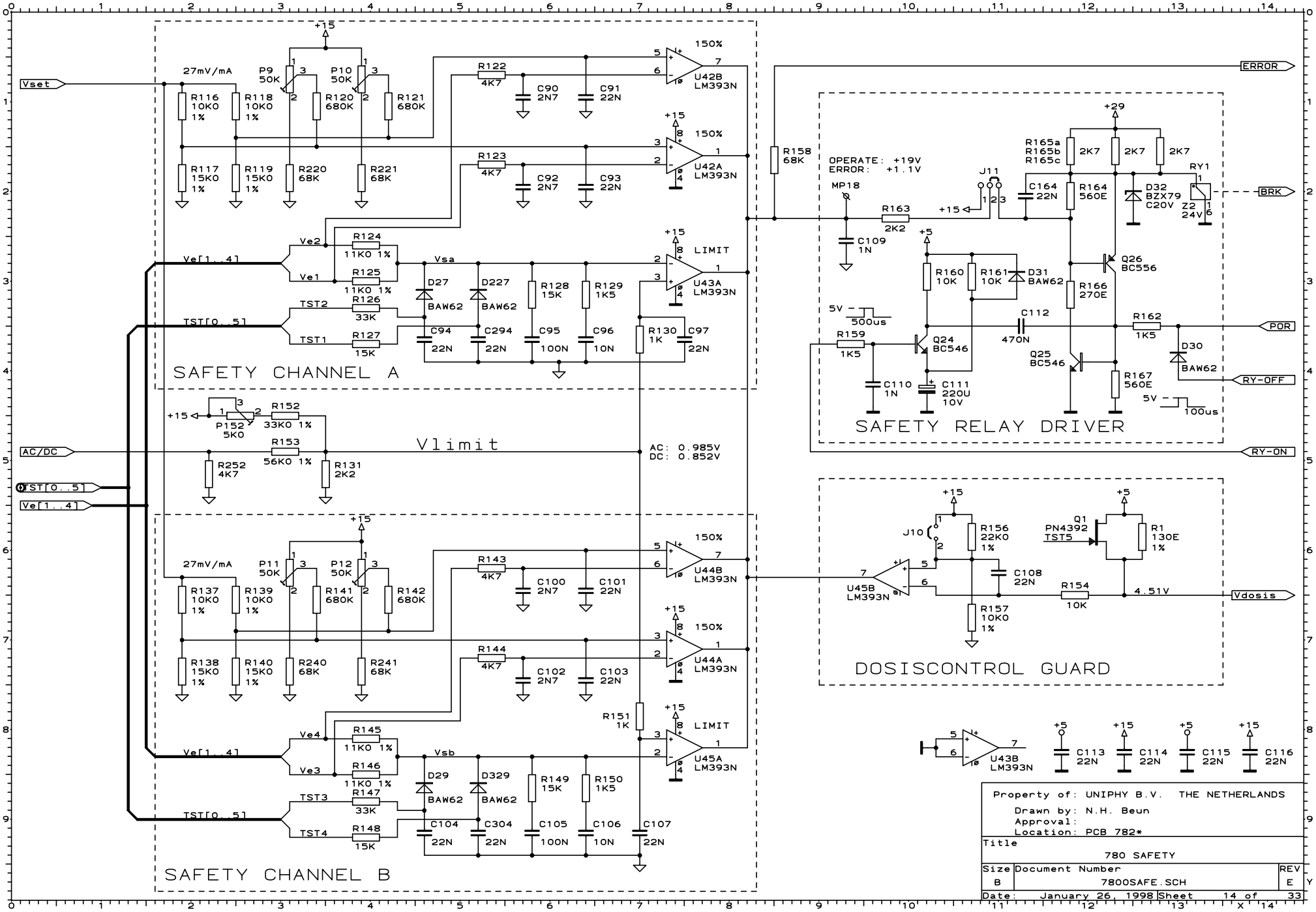
SAFETY CHANNEL A
SAFETY CHANNEL B
SAFETY RELAY DRIVER
DOSISCONTROL GUARD
Vset
27mV/mA
P9 50K
P10 50K
R116 10K0 1%
R118 10K0 1%
R117 15K0 1%
R119 15K0 1%
R120 680K
R121 680K
R220 68K
R221 68K
R122 4K7
R123 4K7
C90 2N7
C91 22N
C92 2N7
C93 22N
U42B LM393N
U42A LM393N
150%
Ve2
Ve1
Ve[1..4]
R124 11K0 1%
R125 11K0 1%
Vsa
D27 BAW62
D227 BAW62
R128 15K
R129 1K5
LIMIT
U43A LM393N
TST2
TST1
TST[0..5]
R126 33K
R127 15K
C94 22N
C294 22N
C95 100N
C96 10N
R130 1K
C97 22N
P152 5K0
R152 33K0 1%
R153 56K0 1%
R252 4K7
R131 2K2
Vlimit
AC/DC
AC: 0.985V
DC: 0.852V
P11 50K
P12 50K
R137 10K0 1%
R139 10K0 1%
R138 15K0 1%
R140 15K0 1%
R141 680K
R142 680K
R240 68K
R241 68K
R143 4K7
R144 4K7
C100 2N7
C101 22N
C102 2N7
C103 22N
U44B LM393N
U44A LM393N
R151 1K
Ve4
Ve3
R145 11K0 1%
R146 11K0 1%
Vsb
D29 BAW62
D329 BAW62
R149 15K
R150 1K5
U45A LM393N
TST3
TST4
R147 33K
R148 15K
C104 22N
C304 22N
C105 100N
C106 10N
C107 22N
ERROR
R158 68K
OPERATE: +19V
ERROR: +1.1V
MP18
R163 2K2
C109 1N
J11
C164 22N
R165a 2K7
R165b 2K7
R165c 2K7
R164 560E
D32 BZX79 C20V
RY1
Z2 24V
BRK
R160 10K
R161 10K
D31 BAW62
Q26 BC556
R166 270E
5V 500us
C112 470N
R162 1K5
POR
R159 1K5
Q24 BC546
Q25 BC546
D30 BAW62
RY-OFF
C110 1N
C111 220U 10V
R167 560E
5V 100us
RY-ON
J10
R156 22K0 1%
Q1 PN4392 TST5
R1 130E 1%
U45B LM393N
C108 22N
R154 10K
4.51V
Vdosis
R157 10K0 1%
U43B LM393N
C113 22N
C114 22N
C115 22N
C116 22N
Property of: UNIPHY B.V. THE NETHERLANDS
Drawn by: N.H. Beun
Approval:
Location: PCB 782*
Title
780 SAFETY
Size B
Document Number 7800SAFE.SCH
REV E
Date: January 26, 1998
Sheet 14 of 33

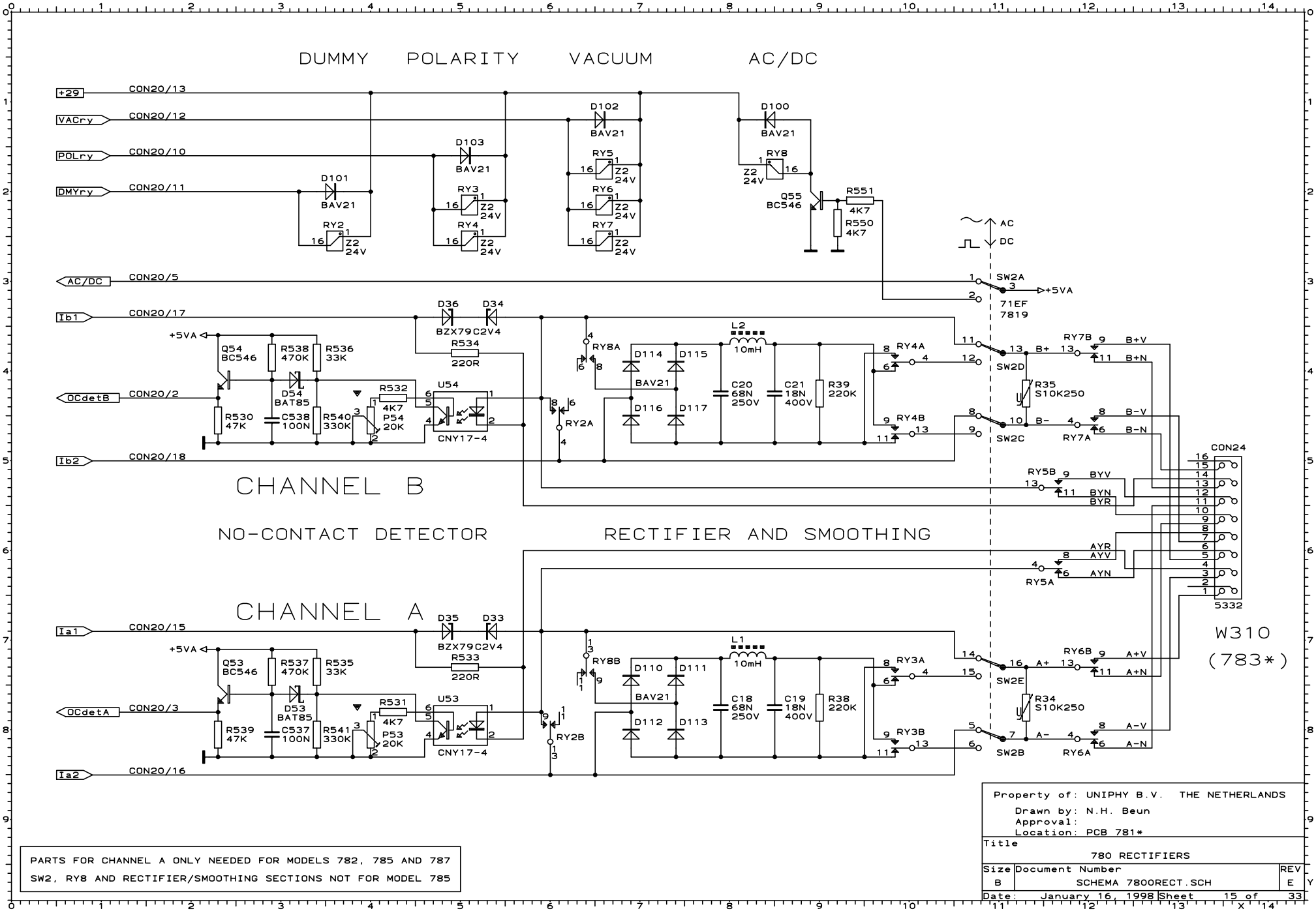
DUMMY
POLARITY
VACUUM
AC/DC
+29
VACry
POLry
DMYry
AC/DC
Ib1
Ib2
OCdetB
Ia1
Ia2
OCdetA
CON20/13
CON20/12
CON20/10
CON20/11
CON20/5
CON20/17
CON20/2
CON20/18
CON20/15
CON20/3
CON20/16
D101
D102
D103
D100
BAV21
RY2
RY3
RY4
RY5
RY6
RY7
RY8
Z2
24V
Q55
BC546
R551
4K7
R550
4K7
AC
DC
SW2A
71EF
7819
+5VA
D36
D34
BZX79C2V4
R534
220R
Q54
BC546
R538
470K
R536
33K
D54
BAT85
R530
47K
C538
100N
R540
330K
R532
4K7
P54
20K
U54
CNY17-4
RY8A
RY2A
D114
D115
D116
D117
L2
10mH
C20
68N
250V
C21
18N
400V
R39
220K
RY4A
RY4B
SW2D
SW2C
R35
S10K250
RY7B
RY7A
B+
B-
B+V
B+N
B-V
B-N
CHANNEL B
NO-CONTACT DETECTOR
RECTIFIER AND SMOOTHING
CON24
5332
RY5B
BYV
BYN
BYR
AYR
AYV
AYN
RY5A
CHANNEL A
D35
D33
BZX79C2V4
R533
220R
Q53
BC546
R537
470K
R535
33K
D53
BAT85
R539
47K
C537
100N
R541
330K
R531
4K7
P53
20K
U53
CNY17-4
RY8B
RY2B
D110
D111
D112
D113
L1
10mH
C18
68N
250V
C19
18N
400V
R38
220K
RY3A
RY3B
SW2E
SW2B
R34
S10K250
RY6B
RY6A
A+
A-
A+V
A+N
A-V
A-N
W310
(783*)
PARTS FOR CHANNEL A ONLY NEEDED FOR MODELS 782, 785 AND 787
SW2, RY8 AND RECTIFIER/SMOOTHING SECTIONS NOT FOR MODEL 785
Property of: UNIPHY B.V. THE NETHERLANDS
Drawn by: N.H. Beun
Approval:
Location: PCB 781*
Title
780 RECTIFIERS
Size B
Document Number
SCHEMA 780ORECT.SCH
REV E
Date: January 16, 1998
Sheet 15 of 33

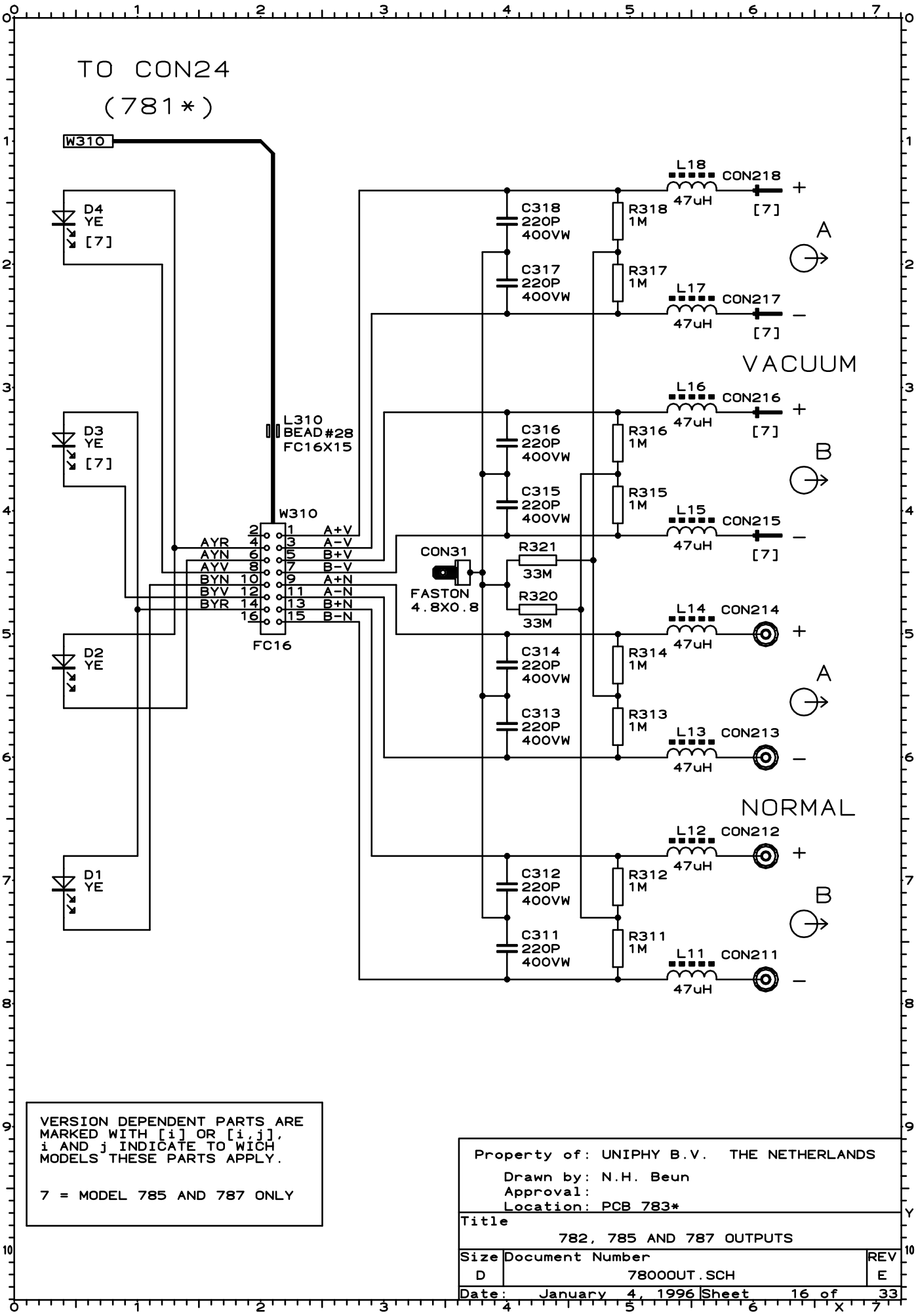

VERSION DEPENDENT PARTS ARE MARKED WITH [i] OR [i,j], i AND j INDICATE TO WICH MODELS THESE PARTS APPLY.

7 = MODEL 785 AND 787 ONLY

Property of: UNIPHY B.V. THE NETHERLANDS

Drawn by: N.H. Beun
Approval:
Location: PCB 783*

Title
782, 785 AND 787 OUTPUTS

Size	Document Number	REV
D	78000UT.SCH	E

Date: January 4, 1996 Sheet 16 of 33

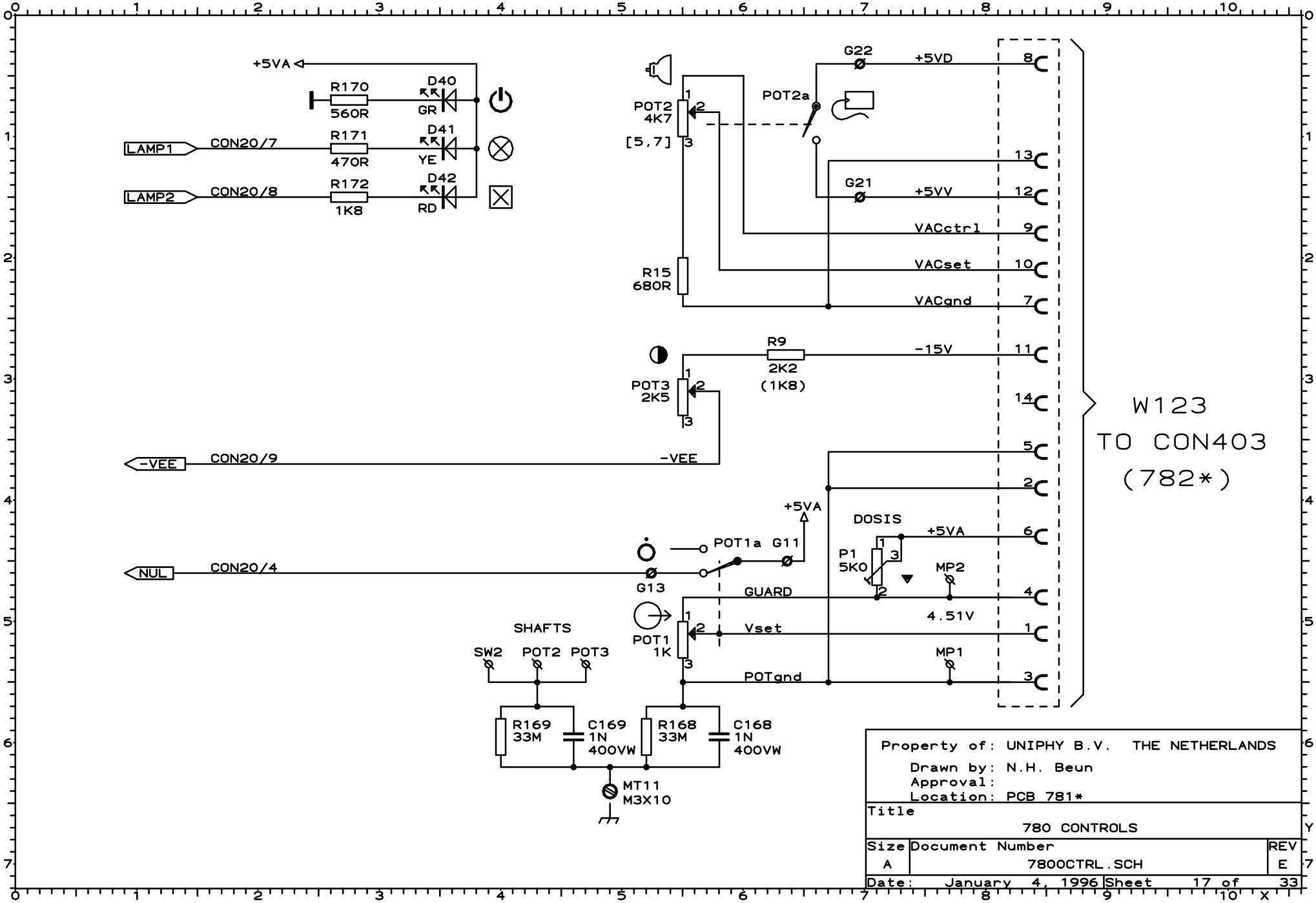
+5VA
R170
560R
D40
GR
LAMP1
CON20/7
R171
470R
D41
YE
LAMP2
CON20/8
R172
1K8
D42
RD
POT2
4K7
[5,7]
R15
680R
POT2a
G22
+5VD
G21
+5VV
VACctrl
VACset
VACgnd
R9
2K2
(1K8)
-15V
POT3
2K5
-VEE
CON20/9
-VEE
NUL
CON20/4
G13
POT1a
G11
+5VA
DOSIS
P1
5K0
+5VA
MP2
4.51V
GUARD
Vset
POTgnd
MP1
POT1
1K
SHAFTS
SW2
POT2
POT3
R169
33M
C169
1N
400VW
R168
33M
C168
1N
400VW
MT11
M3X10
W123
TO CON403
(782*)
Property of: UNIPHY B.V. THE NETHERLANDS
Drawn by: N.H. Beun
Approval:
Location: PCB 781*
Title
780 CONTROLS
Size A
Document Number
7800CTRL.SCH
REV E
Date: January 4, 1996
Sheet 17 of 33

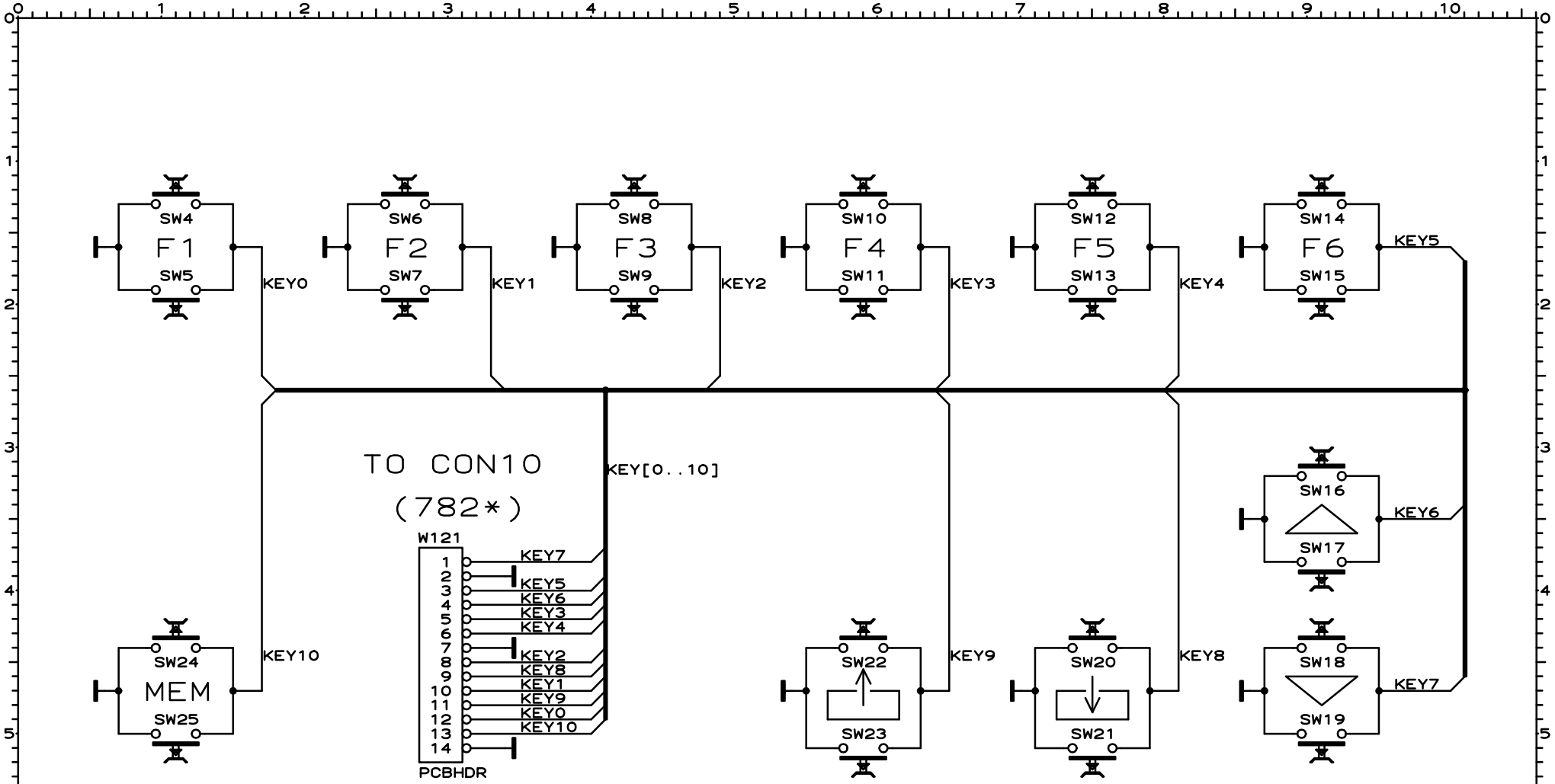

SW4 . . SW25: KSA

Property of: UNIPHY B.V. THE NETHERLANDS Drawn by: N.H. Beun Approval: Location: PCB 784*		
Title 780 CONSOLE		
Size A	Document Number 7800KEY.SCH	REV E
Date: January 16, 1998	Sheet 18 of 33	

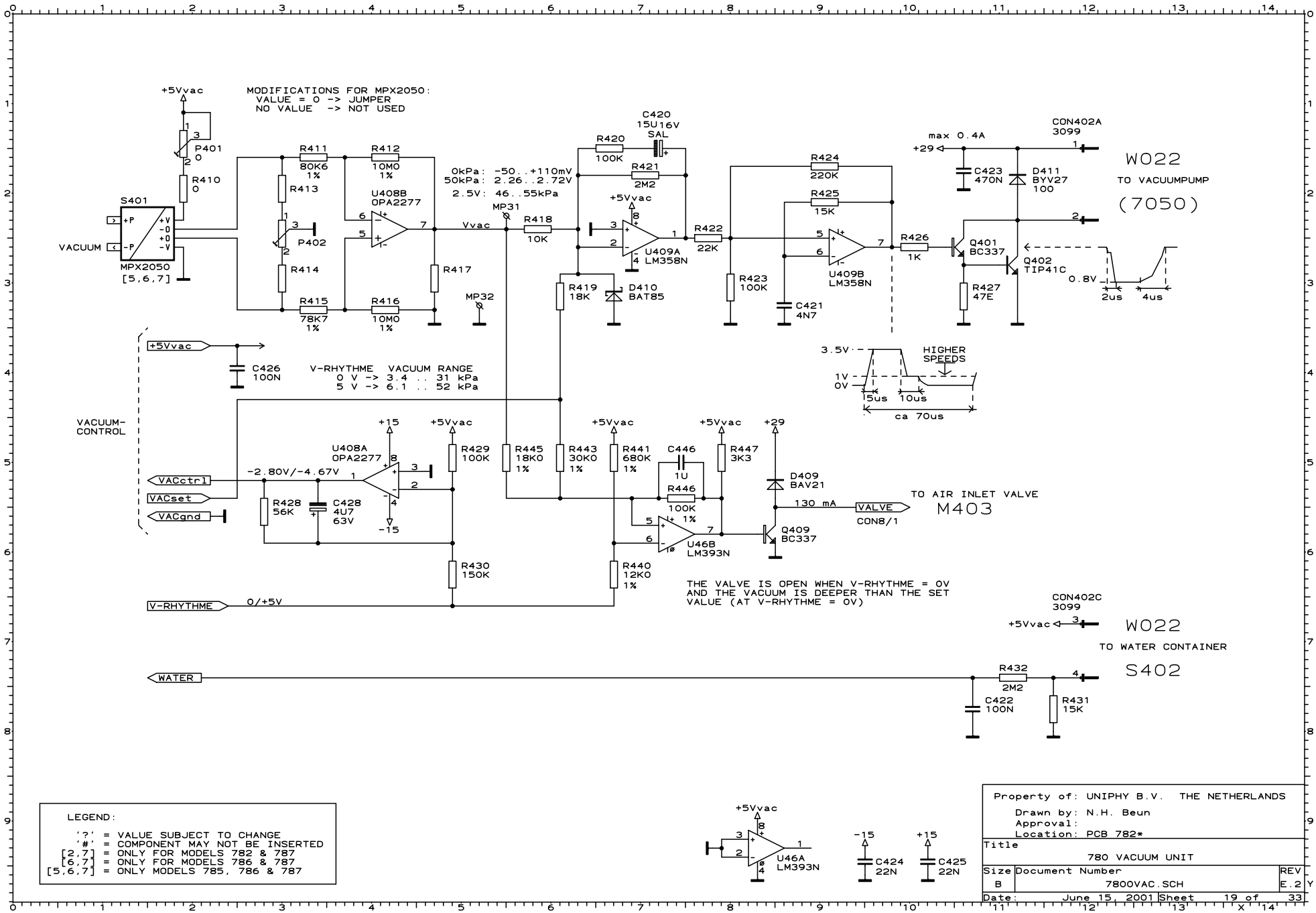
MODIFICATIONS FOR MPX2050:
VALUE = 0 -> JUMPER
NO VALUE -> NOT USED
+5Vvac
P401
0
R410
0
S401
VACUUM
MPX2050
[5,6,7]
R411
80K6
1%
R412
10M0
1%
R413
P402
R414
R415
78K7
1%
R416
10M0
1%
U408B
OPA2277
R417
0kPa: -50..+110mV
50kPa: 2.26..2.72V
2.5V: 46..55kPa
MP31
MP32
Vvac
R418
10K
C420
15U16V
SAL
R420
100K
R421
2M2
U409A
LM358N
R419
18K
D410
BAT85
R422
22K
R423
100K
R424
220K
R425
15K
C421
4N7
U409B
LM358N
R426
1K
max 0.4A
+29
C423
470N
D411
BYV27
100
CON402A
3099
W022
TO VACUUMPUMP
(7050)
Q401
BC337
Q402
TIP41C
R427
47E
0.8V
2us
4us
3.5V
HIGHER
SPEEDS
1V
0V
5us
10us
ca 70us
C426
100N
V-RHYTHME VACUUM RANGE
0 V -> 3.4 .. 31 kPa
5 V -> 6.1 .. 52 kPa
VACUUM-
CONTROL
VACctrl
VACset
VACgnd
-2.80V/-4.67V
R428
56K
C428
4U7
63V
U408A
OPA2277
+15
-15
R429
100K
R430
150K
R445
18K0
1%
R443
30K0
1%
R441
680K
1%
R440
12K0
1%
C446
1U
R446
100K
1%
R447
3K3
D409
BAV21
130 mA
VALVE
CON8/1
TO AIR INLET VALVE
M403
Q409
BC337
U46B
LM393N
THE VALVE IS OPEN WHEN V-RHYTHME = 0V
AND THE VACUUM IS DEEPER THAN THE SET
VALUE (AT V-RHYTHME = 0V)
V-RHYTHME
0/+5V
CON402C
3099
W022
TO WATER CONTAINER
S402
WATER
R432
2M2
C422
100N
R431
15K
U46A
LM393N
C424
22N
C425
22N
LEGEND:
'?' = VALUE SUBJECT TO CHANGE
'#' = COMPONENT MAY NOT BE INSERTED
[2,7] = ONLY FOR MODELS 782 & 787
[6,7] = ONLY FOR MODELS 786 & 787
[5,6,7] = ONLY MODELS 785, 786 & 787
Property of: UNIPHY B.V. THE NETHERLANDS
Drawn by: N.H. Beun
Approval:
Location: PCB 782*
Title
780 VACUUM UNIT
Size B
Document Number
7800VAC.SCH
REV
E.2
Date: June 15, 2001
Sheet 19 of 33

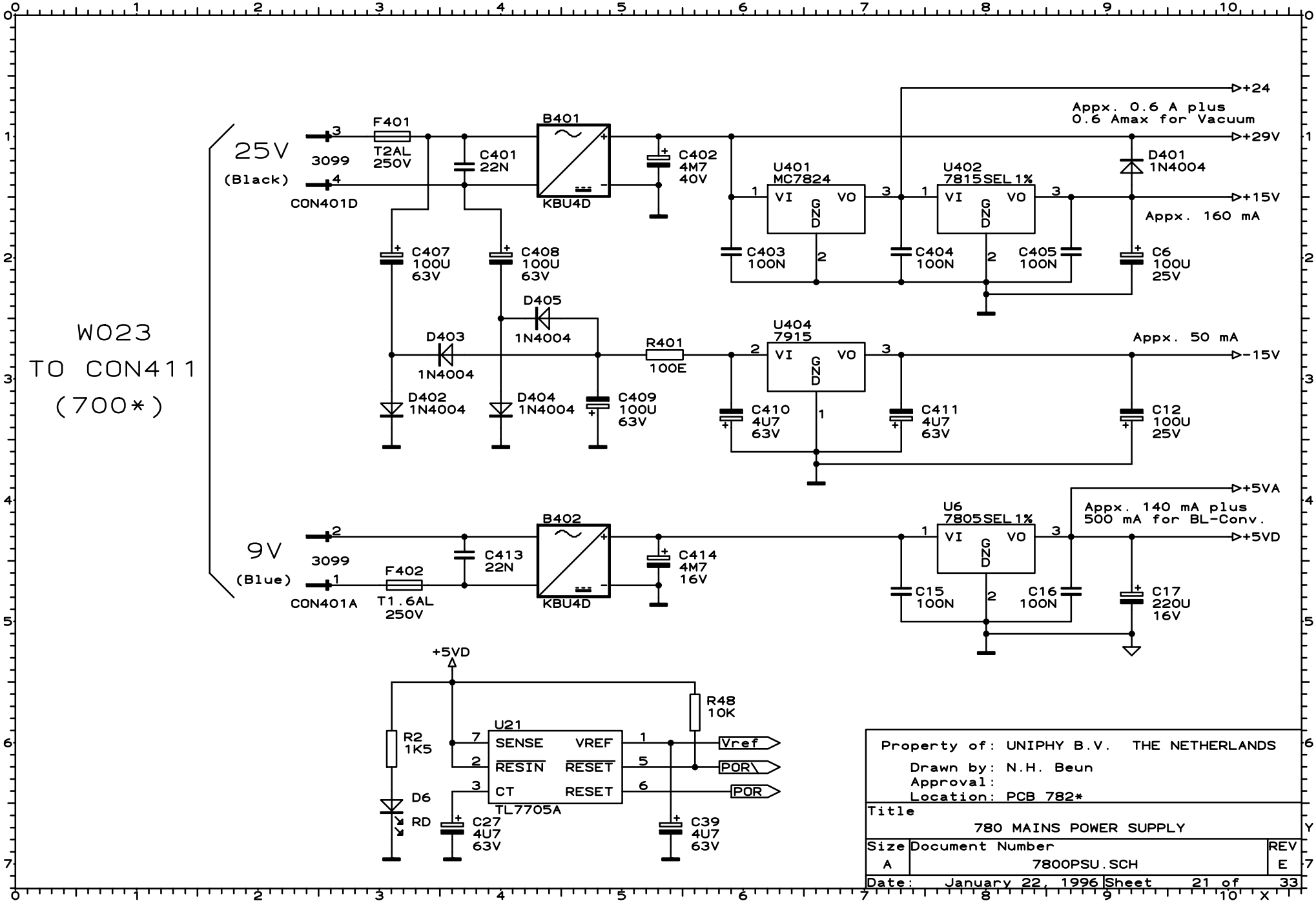
W023
TO CON411
(700*)
25V
(Black)
3099
CON401D
F401
T2AL
250V
C401
22N
B401
KBU4D
C402
4M7
40V
+24
Appx. 0.6 A plus
0.6 Amax for Vacuum
+29V
D401
1N4004
U401
MC7824
VI
VO
GND
U402
7815SEL1%
+15V
Appx. 160 mA
C403
100N
C404
100N
C405
100N
C6
100U
25V
C407
100U
63V
C408
100U
63V
D405
1N4004
D403
1N4004
R401
100E
U404
7915
Appx. 50 mA
-15V
D402
1N4004
D404
1N4004
C409
100U
63V
C410
4U7
63V
C411
4U7
63V
C12
100U
25V
+5VA
Appx. 140 mA plus
500 mA for BL-Conv.
U6
7805SEL1%
+5VD
9V
(Blue)
3099
CON401A
F402
T1.6AL
250V
C413
22N
B402
KBU4D
C414
4M7
16V
C15
100N
C16
100N
C17
220U
16V
+5VD
R48
10K
U21
SENSE
VREF
RESIN
RESET
CT
RESET
TL7705A
Vref
POR
POR
R2
1K5
D6
RD
C27
4U7
63V
C39
4U7
63V
Property of: UNIPHY B.V. THE NETHERLANDS
Drawn by: N.H. Beun
Approval:
Location: PCB 782*
Title
780 MAINS POWER SUPPLY
Size
A
Document Number
7800PSU.SCH
REV
E
Date: January 22, 1996
Sheet 21 of 33

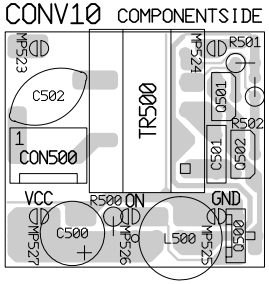

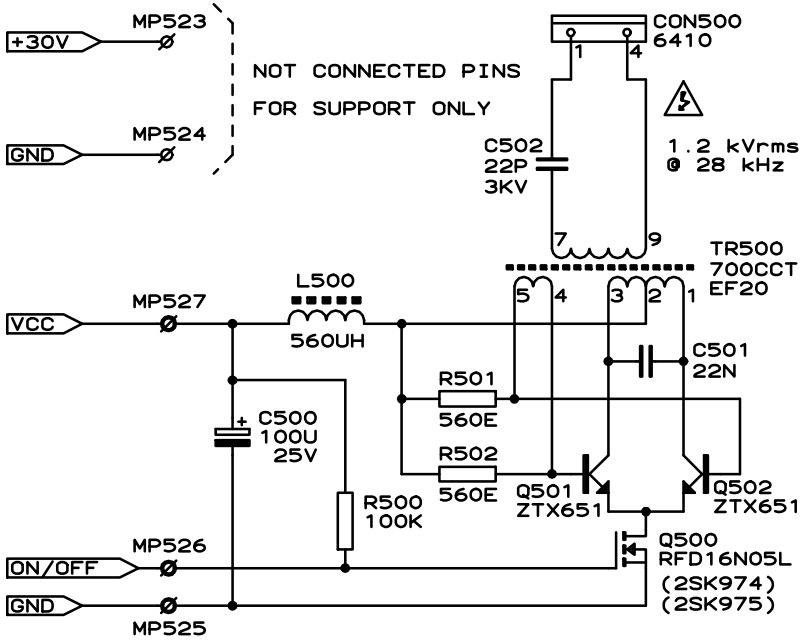

CONV10.SCH (JUNE 21, 1993)

Property of: UNIPHY B.V. THE NETHERLANDS Drawn by: N.H. Beun Approval: Location: PCB CONV1*		
Title CONV10 BACKLIGHT CONVERTER		
Size A	Document Number 7800CONV.SCH	REV E
Date: January 16, 1998	Sheet 22 of 33	

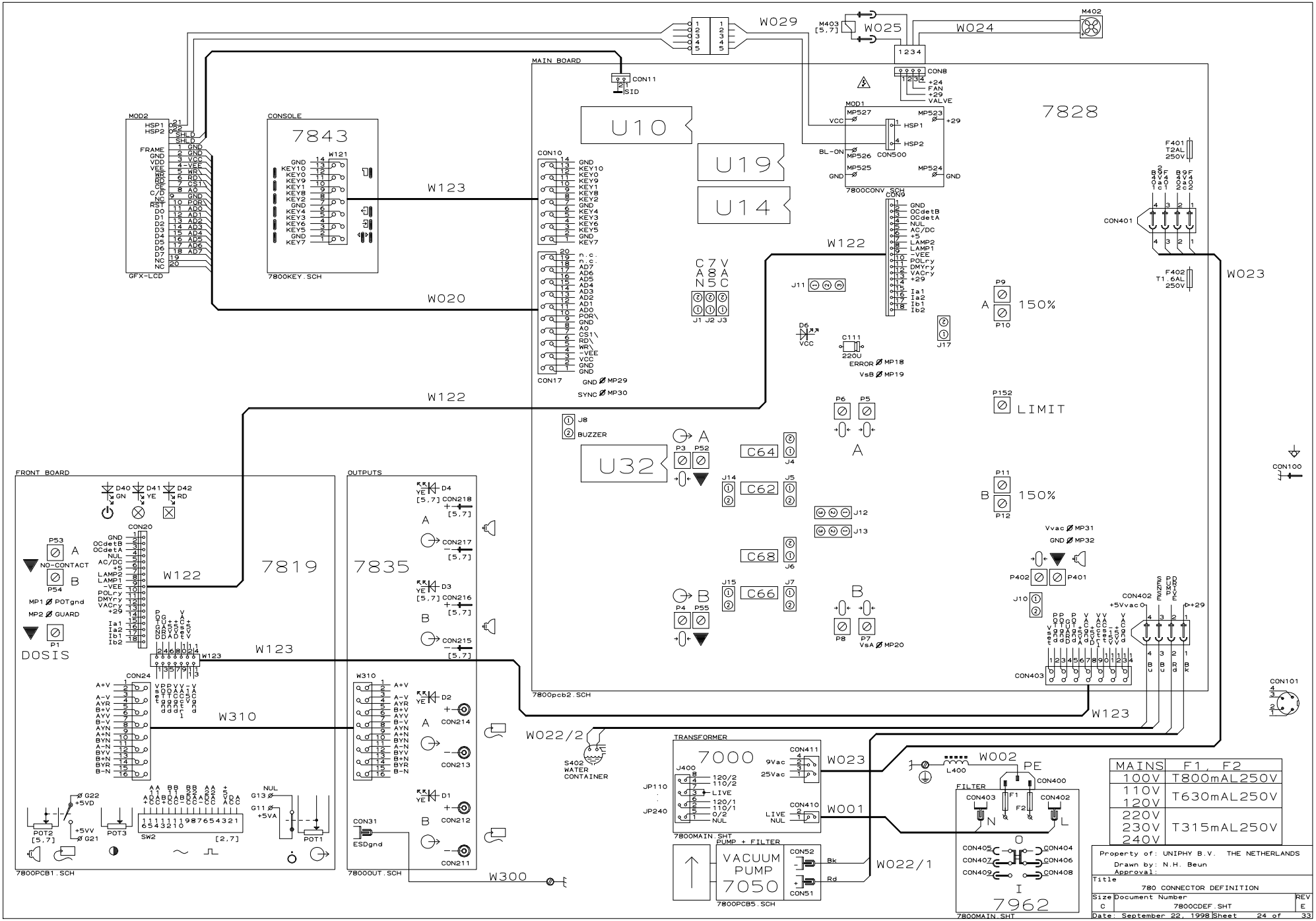

MAINS	F1, F2
100V	T800mAL250V
110V 120V	T630mAL250V
220V 230V 240V	T315mAL250V

Property of: UNIPHY B.V. THE NETHERLANDS
Drawn by: N.H. Beun
Approval:

Title
780 CONNECTOR DEFINITION

Size	Document Number	REV
C	7800CDEF.SHT	E

Date: September 22, 1998 Sheet 24 of 33

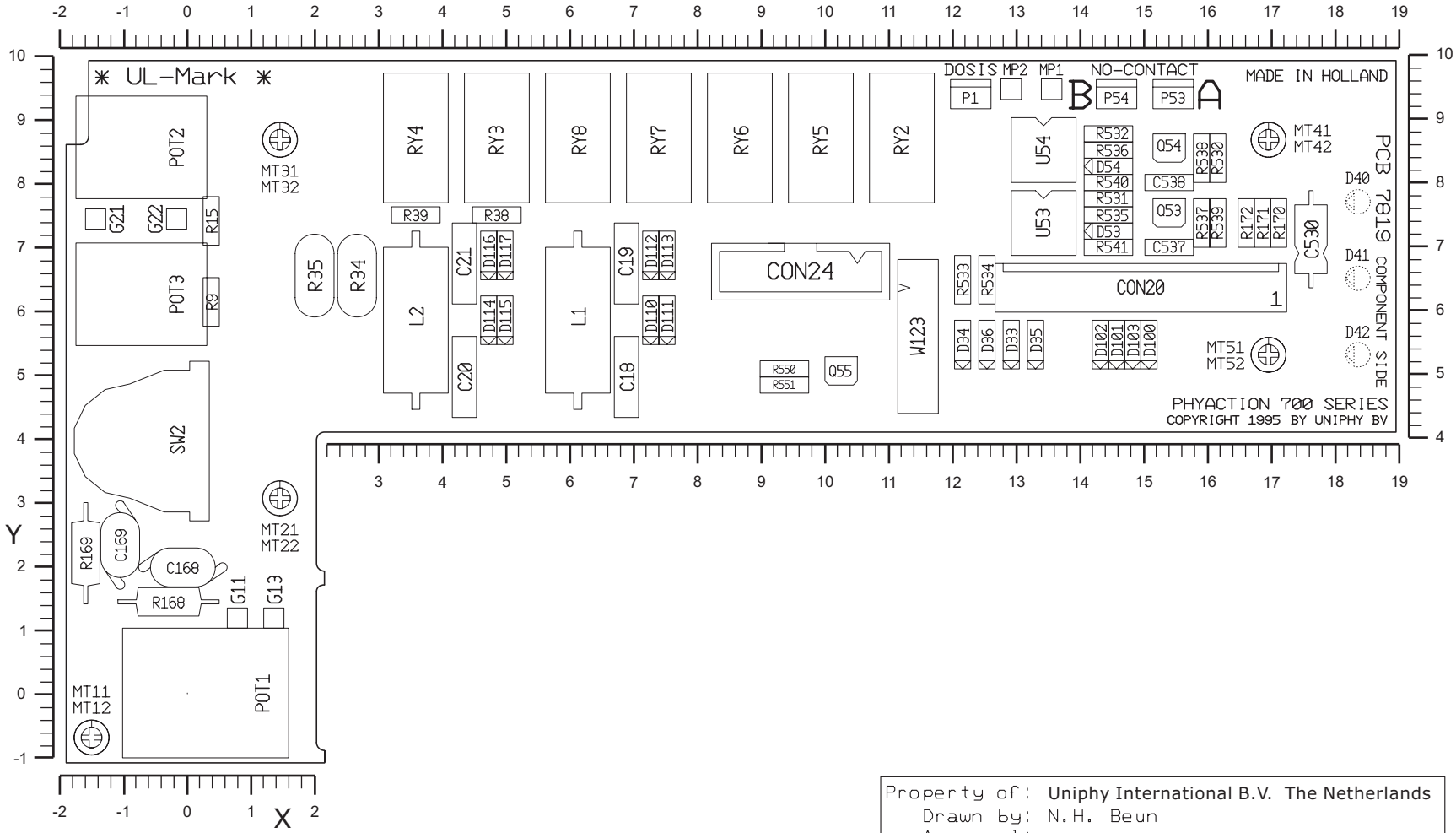

Property of: Uniphy International B.V. The Netherlands Drawn by: N.H. Beun Approval:			
Title Component Layout PCB 7819			
Size A4	Document Number 7819e.ps		REV E
Date: October 20, 1995	Sheet 26-1 of 33		

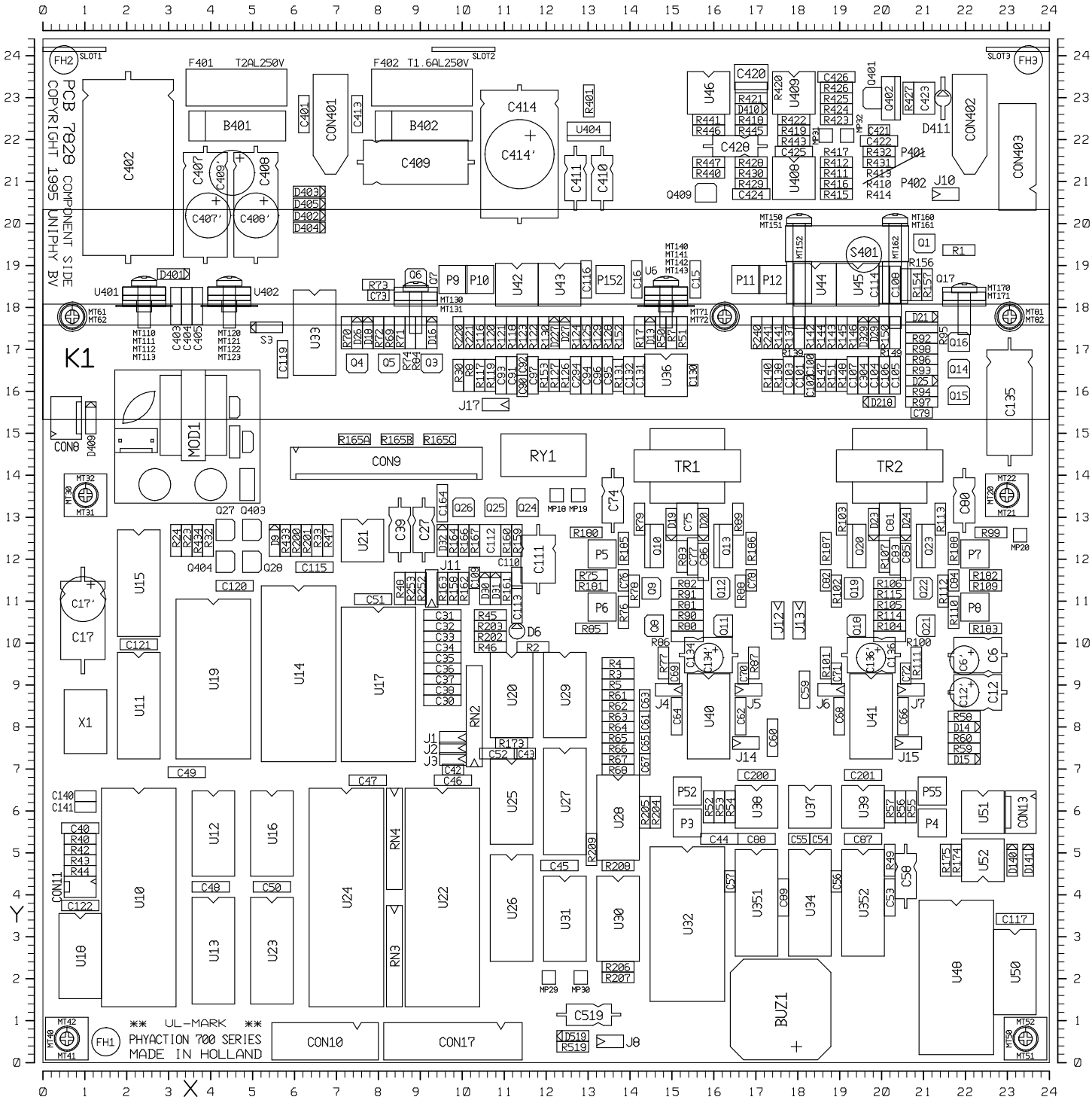

Property of: GymnaUniphy N.V. Belgium Drawn by: N.H. Beun Approval:		
Title Component Layout PCB 7828		
Size A4	Document Number 7828e2.ps	REV E.2
Date: June 15, 2001	Sheet 27-1 of 33	

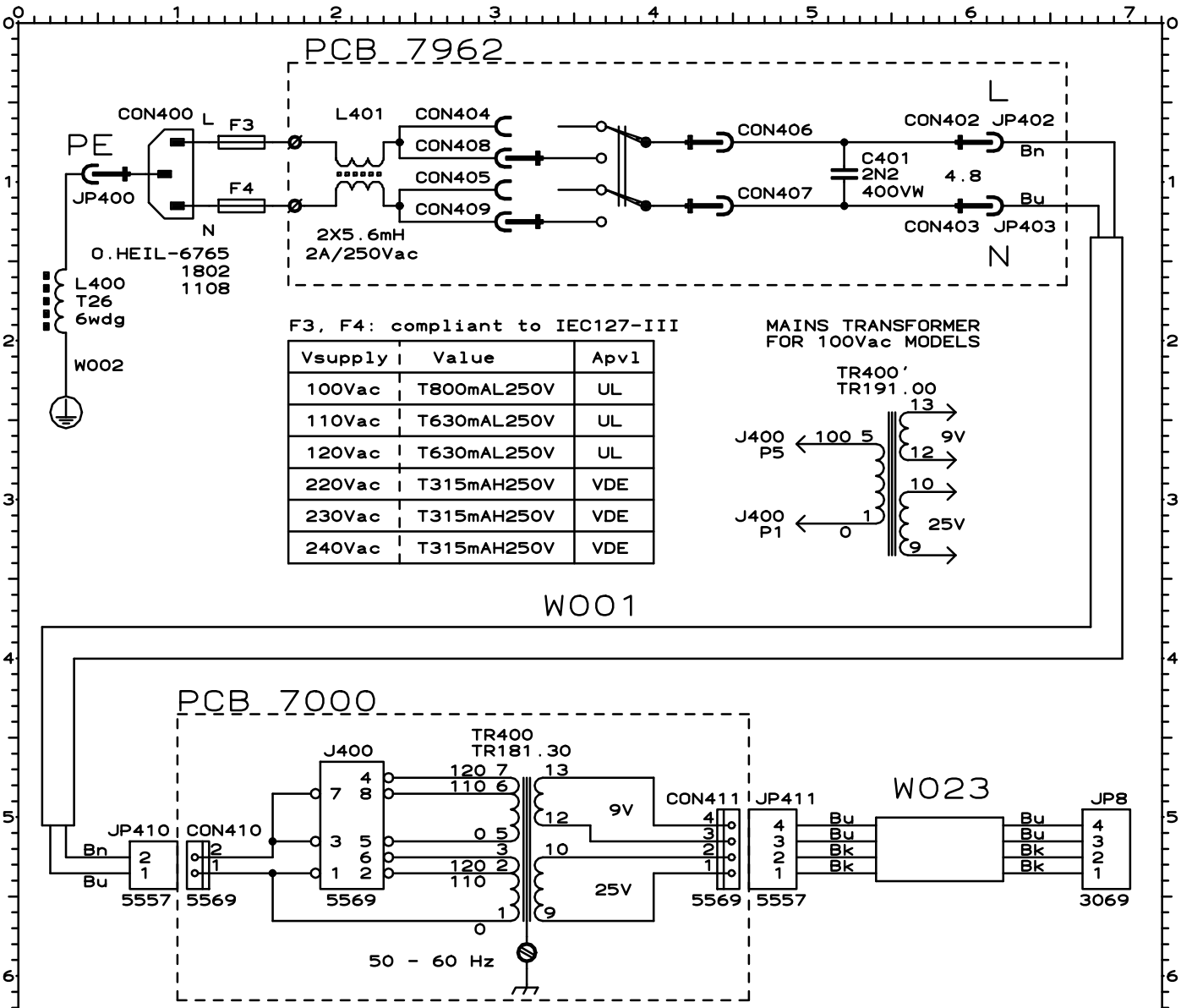

Vsupply	Value	Apvl
100Vac	T800mAL250V	UL
110Vac	T630mAL250V	UL
120Vac	T630mAL250V	UL
220Vac	T315mAH250V	VDE
230Vac	T315mAH250V	VDE
240Vac	T315mAH250V	VDE

SELECTOR WIRING DEPENDENT ON RATED MAINS VOLTAGE

SELECTORS CAN BE IDENTIFIED BY THE COLOR OF THE INSULATION SLEEVE

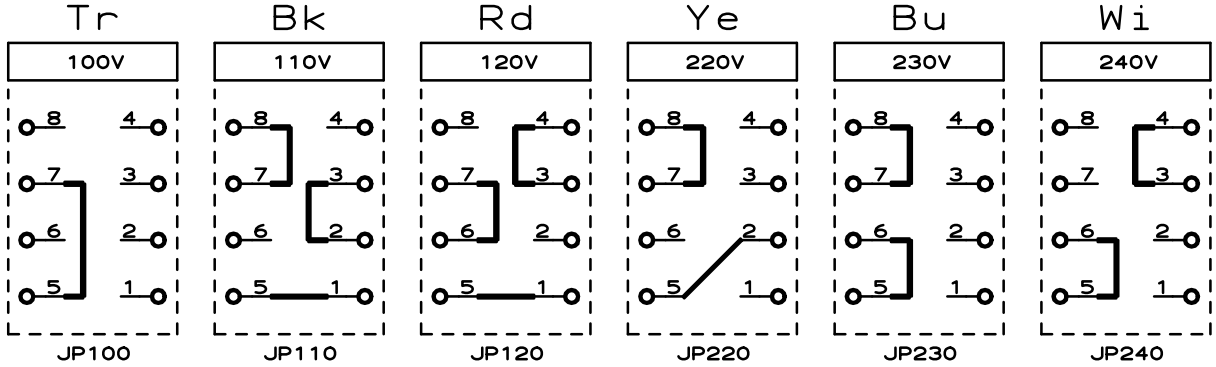

LEGEND FOR COLORS:

Bk - BLACK
Bn - BROWN
Bu - BLUE
Tr - TRANSPARANT
Rd - RED
Wi - WHITE
Ye - YELLOW

Property of: UNIPHY B.V. THE NETHERLANDS
Drawn by: N.H. Beun
Approval:

Title: 780 MAINS PART

Size	Document Number	REV
D	7800MAIN.SHT	E

Date: January 16, 1998 Sheet 6 of 33

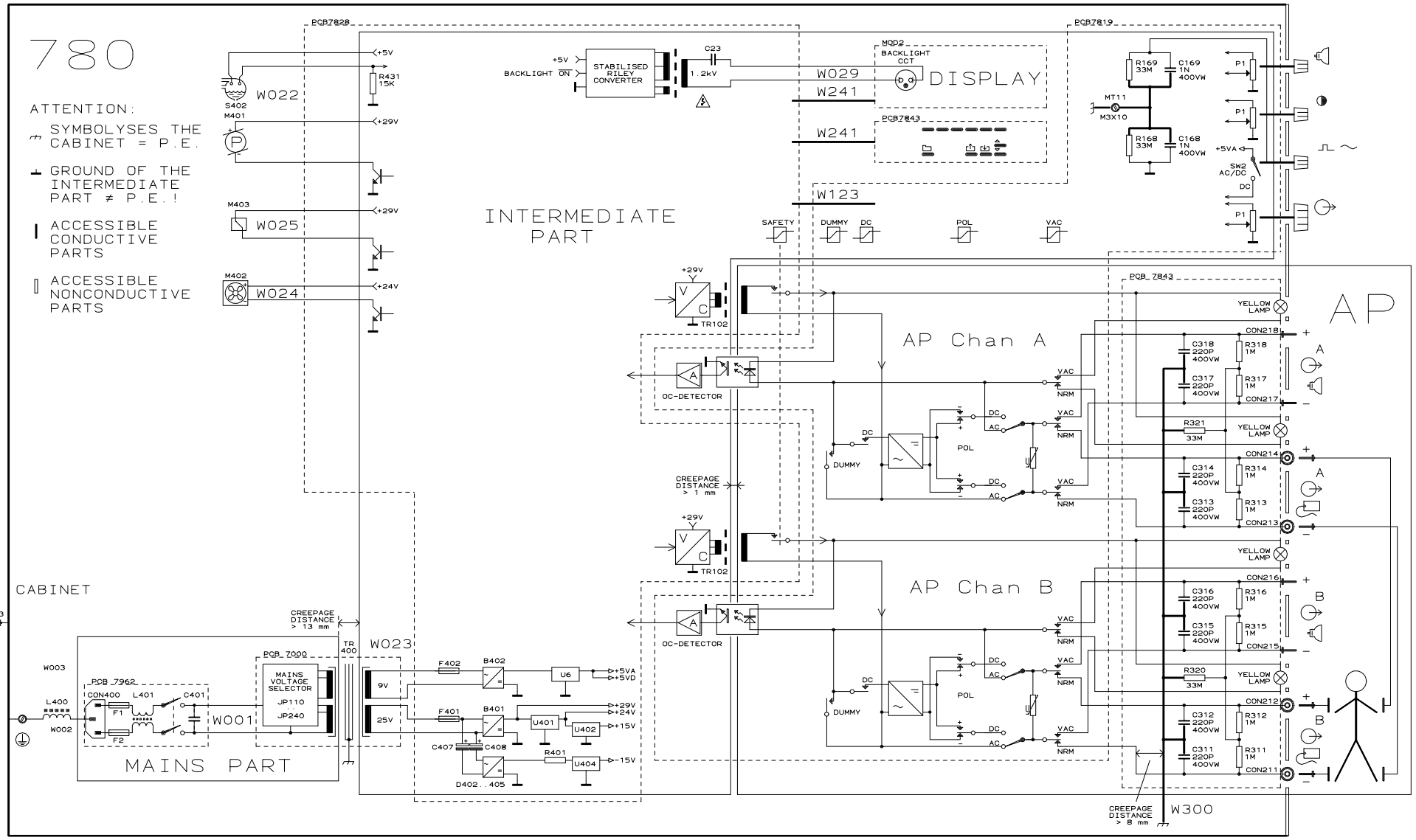

Property of: UNIPHY B.V. THE NETHERLANDS
Drawn by: N.H. Beun
Approval:

Title: 780 ISOLATION DIAGRAM

Size	Document Number	REV
C	7800ISO.SHT	E

Date: September 22, 1998 Sheet 4 of 33